# CITY OF PORTLAND
# PUBLIC WORKS DEPARTMENT

# CONTRACT DRAWINGS

## BEDFORD STREET
## SEWER SEPERATION PROJECT
## PORTLAND WATER DISTRICT MAIN REPLACEMENT

BID NO. 18056

ISSUED FOR BID

FEBRUARY 2018

YEAR
APPROVED
2018

CHRISTOPHER BRANCH, PE — 2/14/18 DATE
PUBLIC WORKS DIRECTOR

JUSTIN PELLERIN, PE — 2/14/18 DATE
PROJECT ENGINEER

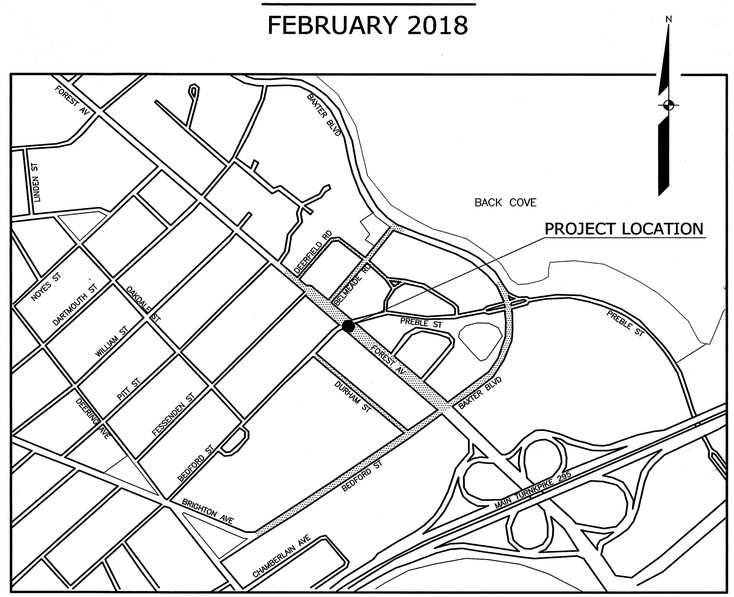


| INDEX OF PLANS | |
|---|---|
| SHEET NO. | SHEET TITLE |
| 1 | COVER SHEET |
| 2 | GENERAL NOTES AND LEGEND |
| 3 | EROSION CONTROL NOTES AND PORTLAND WATER DISTRICT NOTES |
| 4 | TEMPORARY WATER PHASING PLAN |
| 5 | PLAN & PROFILE – BAXTER BOULEVARD OUTFALL |
| 6 | BAXTER BOULEVARD LAYOUT & WATER PLAN |
| 7 | PLAN & PROFILE – BAXTER BOULEVARD STA. 14+00 TO STA. 18+50 |
| 8 | BAXTER BOULEVARD LAYOUT & WATER PLAN |
| 9 | PLAN & PROFILE – BAXTER BOULEVARD STA. 18+50 STO STA. 22+85.55 |
| 10 | BEDFORD STREET LAYOUT & WATER PLAN |
| 11 | PLAN & PROFILE – BEDFORD STREET STA. 0+00 TO STA. 5+00 |
| 12 | BEDFORD STREET LAYOUT & WATER PLAN |
| 13 | PLAN & PROFILE – BEDFORD STREET STA. 5+00 TO STA. 11+00 |
| 14 | BEDFORD STREET LAYOUT & WATER PLAN |
| 15 | PLAN & PROFILE – BEDFORD STREET STA. 11+00 TO STA. 17+12.46 |
| 16 | FOREST AVENUE LAYOUT & WATER PLAN |
| 17 | PLAN & PROFILE – FOREST AVENUE STA. 0+00 TO STA. 5+00 |
| 18 | FOREST AVENUE LAYOUT & WATER PLAN |
| 19 | PLAN & PROFILE – FOREST AVENUE STA. 5+00 TO STA. 10+00 |
| 20 | FOREST AVENUE LAYOUT & WATER PLAN |
| 21 | PLAN & PROFILE – FOREST AVENUE STA. 10+00 TO STA. 15+00 |
| 22 | DURHAM STREET LAYOUT & WATER PLAN |
| 23 | PLAN & PROFILE – DURHAM STREET STA. 0+00 TO STA. 3+75 |
| 24 | DURHAM STREET LAYOUT & WATER PLAN |
| 25 | PLAN & PROFILE – DURHAM STREET STA. 3+75 TO STA. 7+60 |
| 26 | BELMEADE ROAD LAYOUT & WATER PLAN |
| 27 | PLAN & PROFILE – BELMEADE ROAD STA. –0+85 TO STA. 3+75 |
| 28 | BELMEADE ROAD LAYOUT & WATER PLAN |
| 29 | PLAN & PROFILE – BELMEADE ROAD STA. 3+75 TO STA 6+47.69 |
| 30 | DEERFIELD ROAD LAYOUT & WATER PLAN |
| 31 | PLAN & PROFILE – DEERFIELD ROAD STA 0+00 TO STA. 2+62.72 |
| 32 | DEERFIELD ROAD LAYOUT & WATER PLAN |
| 33 | PLAN & PROFILE – DEERFIELD ROAD STA. 2+62 TO STA. 5+75 |
| 34 | DEERFIELD ROAD LAYOUT & WATER PLAN |
| 35 | PLAN & PROFILE – DEERFIELD ROAD STA. 5+75 TO STA. 8+52.30 |
| 36 | PLAN & PROFILE – GRASMERE ROAD STA. 0+00 TO STA. 2+75 |
| 37 | STANDARD CONSTRUCTION DETAILS |
| 38 | STANDARD CONSTRUCTION DETAILS |
| 39 | STANDARD CONSTRUCTION DETAILS |
| 40 | STANDARD CONSTRUCTION DETAILS |
| 41 | STANDARD CONSTRUCTION DETAILS |
| 42 | STANDARD CONSTRUCTION DETAILS |
| 43 | STANDARD CONSTRUCTION DETAILS |
| 44 | PORTLAND WATER DISTRICT DETAILS |
| 45 | PORTLAND WATER DISTRICT DETAILS |
| 46 | BAXTER BOULEVARD RE–STRIPING PLAN, R–1 |

STATE OF MAINE
ROBERT A. McSORLEY
No. 8589
LICENSED
PROFESSIONAL ENGINEER
2-16-2018

02-16-2018

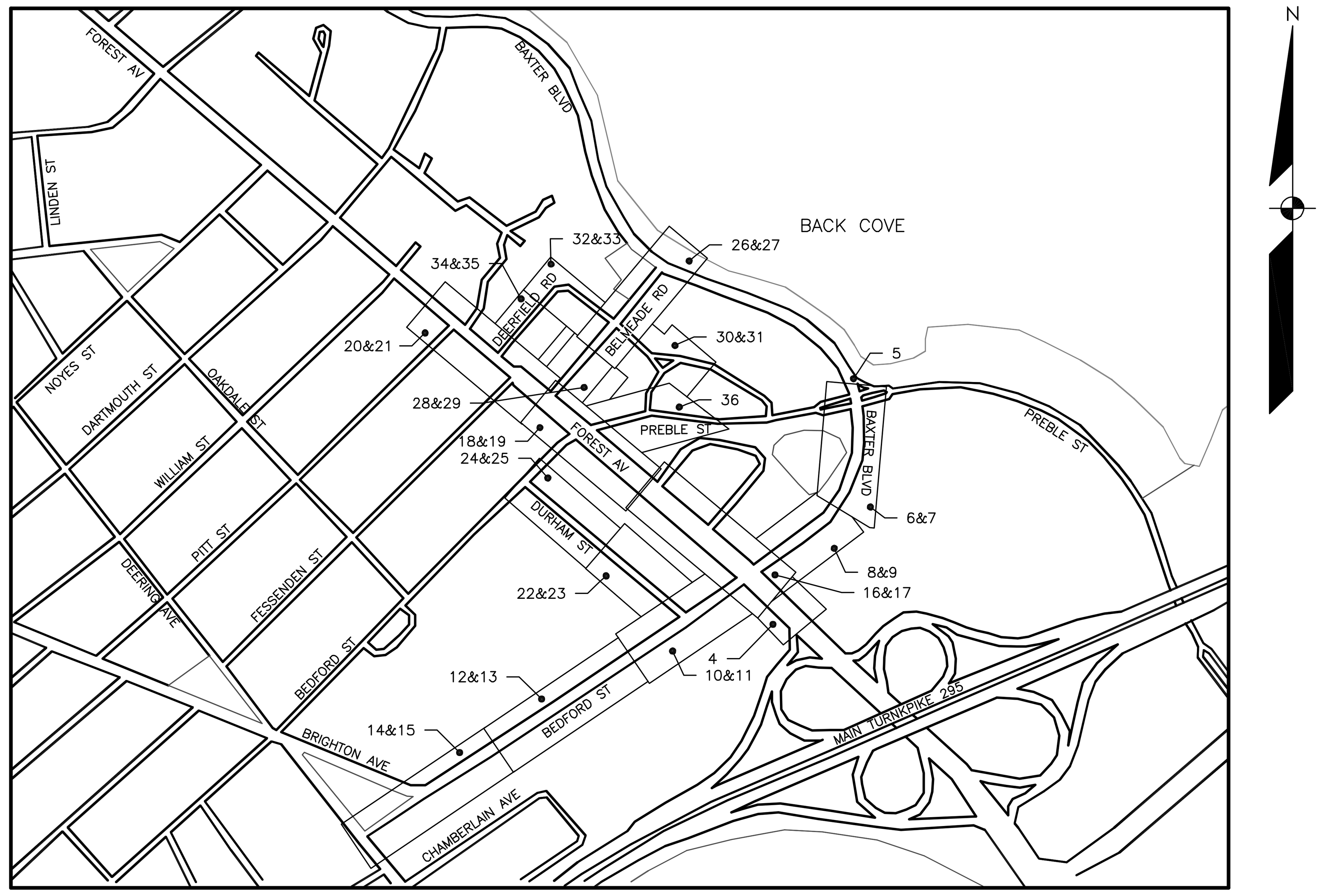


## LOCATION MAP

NOT TO SCALE

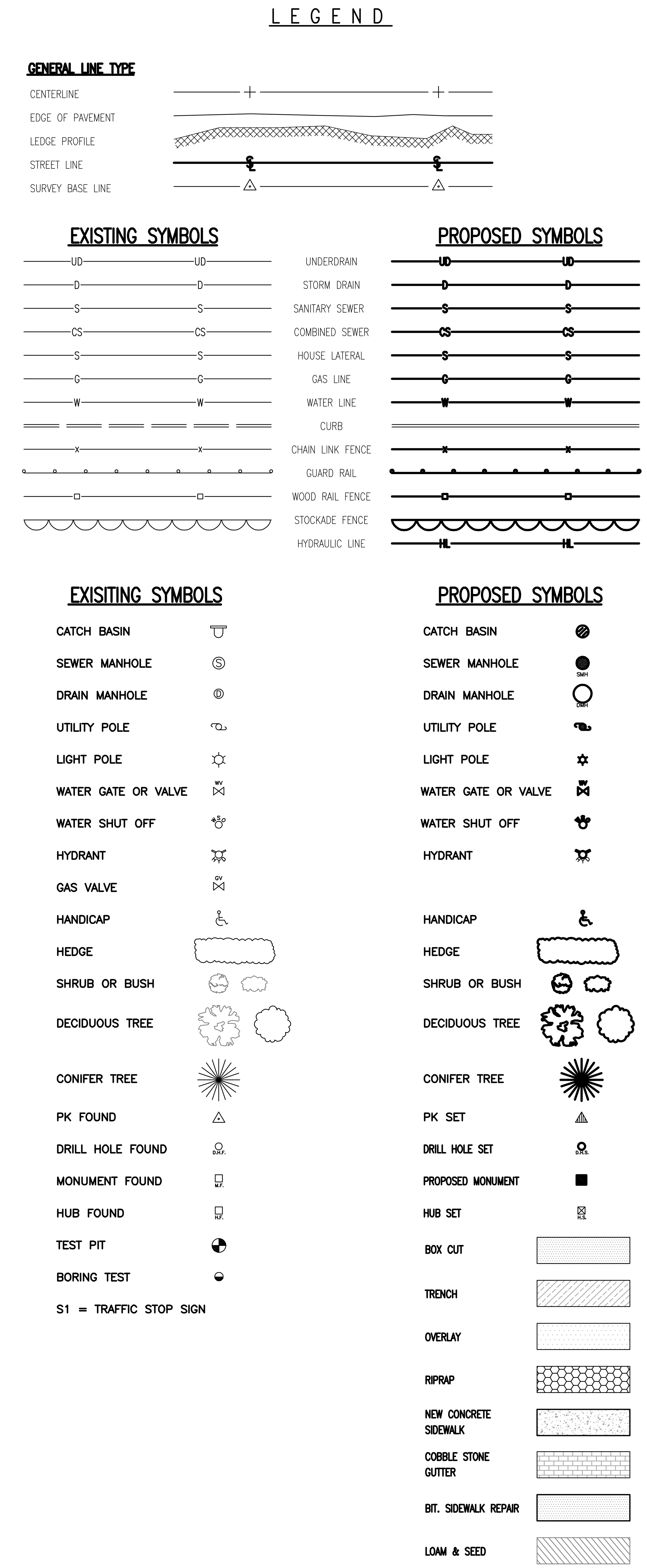


## GENERAL NOTES

1. LOCATIONS OF UTILITIES ARE APPROXIMATE AND IT SHALL BE THE CONTRACTOR'S RESPONSIBILITY TO HAVE ALL THE UTILITIES LOCATE THEIR SERVICES PRIOR TO THE START OF CONSTRUCTION. THE LOCATION, TYPE AND SIZE OF EXISTING PIPES, DUCTS, CONDUITS AND OTHER UNDERGROUND UTILITIES AND STRUCTURES SHOWN ON THE DRAWINGS ARE NOT WARRANTED TO BE EXACT NOR IS IT WARRANTED THAT ALL UNDERGROUND UTILITIES AND STRUCTURES ARE SHOWN. INFORMATION SHOWN IS CONSIDERED APPROXIMATE BOTH AS TO SIZE AND LOCATION AND IS INDICATED ON THE DRAWINGS TO GIVE BIDDERS A GENERAL IDEA OF EXISTING CONDITIONS. IT IS UNDERSTOOD AND AGREED THAT THE CONTRACTOR SHALL NOT RELY UPON THESE DRAWINGS FOR SUCH INFORMATION AND SHALL MAKE EXAMINATIONS IN THE FIELD BY VARIOUS AVAILABLE METHODS AND SHALL OBTAIN INFORMATION FROM UTILITY CORPORATIONS AND INDIVIDUALS AS TO THE LOCATION OF ALL SUBSURFACE STRUCTURES, BOTH PUBLIC AND PRIVATE PRIOR TO COMMENCEMENT OF CONSTRUCTION. DEPTH OF SERVICES ARE UNKNOWN AND SHALL BE FIELD VERIFIED BY THE CONTRACTOR. EXCAVATING TEST PITS AS NECESSARY TO VERIFY UTILITY LOCATIONS AND DEPTHS SHALL BE INCIDENTAL TO THIS PROJECT.

2. PRIOR TO THE BEGINNING OF CONSTRUCTION, THE CONTRACTOR SHALL SECURE A STREET OPENING PERMIT FROM THE PORTLAND PUBLIC WORKS DEPARTMENT. NO FEE WILL BE CHARGED FOR THIS PERMIT. CONTRACTOR IS REQUIRED TO SUBMIT A STREET OPENING PERMIT FOR EACH INDIVIDUAL PROJECT STREET.

3. PROPERTY MARKERS AND STREET LINE MONUMENTS SHALL BE PROPERLY PROTECTED AND SHALL NOT BE DISTURBED. IF DISTURBED, THEY SHALL BE REPLACED BY A LICENSED SURVEYOR AT THE CONTRACTOR'S EXPENSE.

4. DEMOLITION SHALL BE COMPLETED IN COORDINATION WITH NEW INFRASTRUCTURE.

5. ALL EXISTING CATCH BASINS, MANHOLES, CONNECTIONS, CONDUIT AND PIPING SHALL BE CLEANED AND LEFT IN SATISFACTORY OPERATING CONDITION AFTER CONSTRUCTION HAS BEEN COMPLETED. NO SEPARATE PAYMENT WILL BE MADE FOR THIS WORK.

6. ALL LAWN AREAS, WALKWAYS, AND DRIVEWAYS OUTSIDE THE WORK AREA, DAMAGED BY THE CONTRACTOR, SHALL BE REPAIRED BY THE CONTRACTOR AT NO EXPENSE TO THE CITY.

7. THE CONTRACTOR SHALL BE RESPONSIBLE FOR THE PRESERVATION OF ALL TREES AND SHRUBS ON THE PROJECT WHICH ARE NOT TO BE REMOVED.

8. EXISTING PAVEMENT SHALL BE SAW CUT AND BUTTED TO THE NEW PAVEMENT. NO FEATHERING OF PAVEMENT WILL BE PERMITTED. DRIVEWAY BUTT JOINTS ARE INCIDENTAL TO THE CONTRACT AND SHALL NOT REQUIRE MEASUREMENT.

9. EXISTING DRAINAGE STRUCTURES SHALL NOT BE DISTURBED UNLESS OTHERWISE NOTED IN THE DRAWINGS OR BY THE CITY REPRESENATIVE.

10. BEFORE CONNECTING NEW PIPES TO AN EXISTING SEWER LINE, THE CONTRACTOR SHALL NOTIFY THE SEWER MAINTENANCE DIVISION OR THE CITY OF PORTLAND PUBLIC WORKS DEPARTMENT. NO WORK SHALL BE DONE WITHOUT THEIR APPROVAL.

11. NO ADDITIONAL PAYMENT WILL BE MADE FOR GRADING SIDE SLOPES OF DRIVEWAYS.

12. THE CONTRACTOR SHALL BE RESPONSIBLE FOR REPAIRING ANY TRENCH PAVEMENT THAT HAS EXPERIENCED EXCESSIVE SETTLEMENT, CRACKING, OR OPENING OF JOINTS. REPAIRS MAY INCLUDE OVERLAY, REMOVAL OF UNACCEPTABLE MATERIALS, COMPLETE REPLACEMENT, JOINT SEALING, OR REBUTTING PAVEMENT AS REQUIRED. THIS WORK MAY BE NECESSARY AFTER THE FINAL ACCEPTANCE OF WORK OR PRIOR TO THE END OF THE ONE YEAR GUARANTEE. THIS WORK SHALL BE DONE AT THE CONTRACTOR'S EXPENSE.

13. THE FINISHED PAVEMENT SURFACE GRADE SHALL MATCH EXISTING GRADE UNLESS NOTED OTHERWISE.

14. ALL MANHOLE FRAMES SHALL BE SUPPLIED WITH H-20 LOADING AND SOLID MANHOLE COVERS. THE RIM ELEVATION OF PROPOSED STORM AND SEWER MANHOLES SHALL BE SET AT FINISHED PAVEMENT SURFACE GRADE. WINTERIZATION WILL BE REQUIRED. SEE STANDARD DETAIL.

15. NEW CATCH BASINS SHALL BE INSTALLED WITH A TYPE A-4 CATCH BASIN INLET STONE INCIDENTAL TO PAY ITEM 604.131. RIM ELEVATIONS FOR CATCH BASINS ARE GIVEN AT THE FACE OF CURB AND TAKE INTO ACCOUNT THE 3" DEPRESSION FROM THE NORMAL GUTTER LINE GRADE AS SHOWN IN THE DETAILS.

16. ON ALL "REMOVE" STRUCTURES, THE CONTRACTOR SHALL REMOVE THE STRUCTURE ENTIRELY. ALL EXISTING GRANITE CATCH BASIN STONES, MANHOLE FRAMES AND COVERS TO BE REMOVED SHALL BE DELIVERED TO THE CITY STOCK YARD AS DIRECTED. REMOVAL OF EXISTING STRUCTURAL CONCRETE, CONCRETE, EXCAVATED STRUCTURES, MANHOLES, CATCH BASINS, MORTARED STONE MASONRY, CONCRETE MASONRY, WOODEN TIMBERS/PILES AND ANY OTHER STRUCTURAL ELEMENTS ENCOUNTERED DURING CONSTRUCTION ARE INCIDENTAL TO THE ASSOCIATED PIPE PAY ITEMS. NO SEPARATE PAYMENT WILL BE MADE FOR THIS WORK.

17. REMOVAL OF EXISTING STORM DRAINS, SEWER PIPES OR OTHER PIPE STRUCTURES, BACKFILLING AND ALL ASSOCIATED WORK WITHIN THE EXCAVATION LIMITS OF PROPOSED WORK SHALL BE CONSIDERED INCIDENTAL TO THE COSTS OF CONSTRUCTION. NO EXTRA PAYMENT WILL BE MADE.

18. ALL TERMINAL MANHOLES SHALL HAVE BRICK CHANNELS CONSTRUCTED STRAIGHT THROUGH THE MANHOLE.

19. THE CONTRACTOR SHALL PROVIDE ALL LABOR, EQUIPMENT AND MATERIALS AS REQUIRED TO PERFORM THE WORK AS INDICATED ON THE DRAWINGS AND IN THE SPECIFICATIONS. ALL WORK SHALL BE COMPLETED IN ACCORDANCE WITH THE APPLICABLE FEDERAL, STATE AND LOCAL CODES.

20. THE CONTRACTOR SHALL BE RESPONSIBLE FOR THE LAYOUT OF ALL PROPOSED WORK AS SHOWN ON THE DRAWINGS (STATIONS AND OFFSETS FOR MANHOLES AND OTHER STRUCTURES ARE SHOWN ON THE DRAWINGS TO THE CENTER OF EACH). ADDITIONALLY, THE CONTRACTOR IS RESPONSIBLE FOR PROVIDING ALL "AS-BUILT" INFORMATION AS REQUIRED IN THE SPECIFICATION

21. THE PROJECT WILL REQUIRE RE-LOCATION OF UNITIL NATURAL GAS LINES. THE CONTRACTOR SHALL COORDINATE WITH UNITIL AND SHALL LAYOUT THE LOCATION OF THE NATURAL GAS LINE RE-LOCATION AS SHOWN ON THE CONTRACT DRAWINGS. UNITIL PLANS TO START WORK IN BEDFORD STREET IN APRIL 2018.

22. THE QUANTITY OF HOUSE AND STORM DRAIN LATERALS INCLUDES A QUANTITY FOR EVERY HOUSE WITHIN PROJECT LIMITS EVEN THOUGH NOT ALL ARE SHOWN ON THE PLANS. THE FINAL DETERMINATION OF HOW MANY ARE INSTALLED WILL BE DETERMINED IN THE FIELD BY ENGINEER.

23. THE EXISTING COLLECTION SYSTEM INCLUDING GRAVITY SEWERS AND STORM DRAINS SHALL REMAIN FULLY OPERATIONAL DURING CONSTRUCTION UNTIL PROJECT IS COMPLETED AND ACCEPTED BY OWNER. THE CONTRACTOR SHALL FULLY COORDINATE CONSTRUCTION ACTIVITIES WITH THE OWNER'S OPERATIONS TO MINIMIZE ADVERSE IMPACTS ON THEIR EXISTING OPERATIONS. THE COST OF ADDITIONAL WORK REQUIRED TO MAINTAIN EXISTING OPERATIONS THROUGHOUT CONSTRUCTION OPERATIONS WILL NOT BE ELIGIBLE FOR PAYMENT AS AN EXTRA UNDER A CHANGE ORDER; RATHER, THESE COSTS WILL BE CONSIDERED AS "INCIDENTAL" TO THE BIDS SUBMITTED FOR THIS CONTRACT. ALSO, THE NECESSITY TO COORDINATE CONSTRUCTION ACTIVITIES WITH OWNER OPERATIONS WILL NOT BE CONSIDERED A VALID OR MERITORIOUS REASON FOR A DELAY CLAIM OR TIME EXTENSION ON THIS PROJECT.

24. THERE MAY BE ONE OR MORE CONTRACTORS PERFORMING WORK IN THE PROJECT AREA. COORDINATION BETWEEN CONTRACTORS IS A PRIMARY RESPONSIBILITY OF EACH CONTRACTOR WITH THE INTENT TO AVOID DELAYS, COMPLICATIONS AND UNDO DISRUPTION OF CONSTRUCTION ACTIVITY.

25. THE CONTRACTOR SHALL MAINTAIN TRAFFIC IN A SAFE MANNER AT ALL TIMES DURING CONSTRUCTION. THE MOST CURRENT EDITION OF THE MANUAL ON UNIFORM TRAFFIC CONTROL DEVICES (MUTCD) MANUAL FOR BOTH WORK ZONE AND TRAFFIC CONTROL REQUIREMENTS SHALL APPLY. THE CONTRACTOR SHALL BE RESPONSIBLE FOR CREATING A TRAFFIC CONTROL PLAN IN ACCORDANCE WITH SECTION 652 (PAY ITEM 652.39).

26. EXISTING FACILITIES AND IMPROVEMENTS (I.E. LIGHT POLES, SIGNS, ETC.) SHALL BE REMOVED AND REPLACED OR PROTECTED AS REQUIRED DURING CONSTRUCTION AND SHALL BE CONSIDERED INCIDENTAL TO THE RELATED PAY ITEMS. BRACING OF UTILITY POLES, WHERE REQUIRED, SHALL BE INCIDENTAL TO THE PROJECT.

27. THE CONTRACTOR SHALL BE RESPONSIBLE FOR THE PRESERVATION OF ALL TREES ON THE PROJECT WHICH ARE NOT CALLED TO BE REMOVED. EQUIPMENT AND MATERIALS SHALL NOT BE STORED OVER THE ROOT ZONE WHICH SHALL BE DEFINED AS THE AREA ENCOMPASSED BY THE DRIPLINE. WHENEVER POSSIBLE, OTHER PLANTINGS SHALL BE PRESERVED BY WHATEVER METHOD NECESSARY INCLUDING TRANSPLANTING AND/OR TEMPORARY RELOCATION. THE ASSOCIATED COSTS ARE INCIDENTAL TO THE PROJECT. ANY TREES DAMAGED BY THE CONTRACTOR'S OPERATIONS SHALL BE REPAIRED USING APPROVED TREE DRESSING OR PAINT IN ACCORDANCE WITH THE APPROPRIATE PROVISIONS OF SECTION 201 OF THE STANDARD SPECIFICATIONS. ANY TREE DAMAGED BY THE CONTRACTOR SHALL RESULT IN A FINANCIAL PENALTY OF $1,500 FOR EACH INCIDENCE. DAMAGE SHALL INCLUDE ANY AND ALL IMPACTS TO TREES TO INCLUDE BUT NOT LIMITED TO LIMB/TREE BREAKAGE, DAMAGE TO TREE TRUNKS, ROOTS STRUCTURE AND ANY INCIDENTAL IMPACTS.

28. ALL CONNECTIONS OF PIPING TO EXISTING FACILITIES SHALL BE CONSIDERED INCIDENTAL. THIS INCLUDES ALL WORK REQUIRED TO CORE HOLE, INSTALLATION OF WATERTIGHT CONNECTIONS, AND ALL ASSOCIATED WORK.

29. DELIVERED WITHIN TEN (10) CALENDAR DAYS OF THE CONTRACT SIGNING, THE CONTRACTOR SHALL SUBMIT THREE (3) COPIES OF A CONSTRUCTION OPERATIONS PLAN TO THE ENGINEER, AND CITY OF PORTLAND. THE COST OF THE OPERATIONS PLAN SHALL BE INCIDENTAL.

30. ALL PIPE TRENCH EXCAVATIONS SHALL BE BACKFILLED AND "CLOSED" DURING CONTRACTOR NON-WORKING HOURS INCLUDING NIGHTS, HOLIDAYS AND WEEKENDS. THE CONTRACTOR MAY REQUEST IN WRITING TO THE ENGINEER AND OWNER TO SECURE OPEN EXCAVATION IN LIEU OF BACKFILLED AND "CLOSED." NOT ALLOWING A SECURE OPEN EXCAVATION SHALL NOT BE A BASIS FOR CLAIMS AGAINST THE OWNER.

31. BORINGS WERE COMPLETED IN JANUARY 2018. REFERENCE APPENDIX OF THE SPECIFICATIONS.

32. TEST PITS SHALL BE EXCAVATED AS SHOWN ON THE PLANS OR AS DIRECTED BY THE ENGINEER. THE CONTRACTOR SHALL OBTAIN THE LOCATION OF THE UTILITY/STRUCTURE IN QUESTION WITH TIES TO SURROUNDING FEATURES AND THE ELEVATION OF BOTH THE TOP AND BOTTOM OF THE UTILITY/STRUCTURE. COSTS FOR TEST PITS WILL BE PAID THROUGH THE BID ITEM 203.28.

33. ANY EXCAVATION BY CONTRACTOR THAT UNCOVERS AN HISTORICAL OR ARCHAEOLOGICAL ARTIFACT SHALL BE IMMEDIATELY REPORTED TO OWNER AND A REPRESENTATIVE OF AGENCY. CONSTRUCTION SHALL BE TEMPORARILY HALTED PENDING THE NOTIFICATION PROCESS AND FURTHER DIRECTIONS ISSUED BY AGENCY AFTER CONSULTATION WITH THE STATE HISTORIC PRESERVATION OFFICER (SHPO). CONTRACTOR SHALL NOT BE ENTITLED TO PAY COMPENSATION DUE TO DELAY ASSOCIATED WITH THIS ITEM. COST SHALL BE CONSIDERED INCIDENTAL TO THE PROJECT.

34. ANY REQUIRED PROJECT WORK NOT IDENTIFIED UNDER A PAY ITEM OR RELATED TO A PAY ITEM SHALL BE CONSIDERED INCIDENTAL TO THE CONTRACT. NO EXTRA PAYMENT WILL BE MADE.

35. IF WORK IS NECESSARY BEYOND THE SAW CUT LINES SHOWN ON CONTRACT PLANS TO ACCOMMODATE PROJECT CONSTRUCTION, COSTS SHALL BE CONSIDERED INCIDENTAL TO COSTS OF CONSTRUCTION AND NO EXTRA PAYMENT WILL MADE. ALL REQUIRED PROJECT WORK ASSOCIATED WITH CONTRACT DRAWINGS, DETAILS, GENERAL CONDITIONS AND SPECIFICATIONS SHALL BE CONSIDERED INCIDENTAL TO THE RELATED PAYS ITEMS. NO EXTRA PAYMENT WILL BE MADE FOR ANY DIRECT OR INCIDENTAL WORK REQUIRED TO COMPLETE THE PROJECT IN ITS ENTIRETY AND READY FOR OWNER ACCEPTANCE.

36. EXISTING CONDITIONS AND GROUND SURFACE FEATURES FOR FOREST AVENUE, DURHAM STREET, PREBLE STREET EXTENSION, GRASMERE ROAD, DEERFIELD ROAD AND BELMEADE ROAD ARE BASED UPON FIELD SURVEY COMPLETED BY SEBAGO TECHNICS IN THE SPRING 2017. EXISTING CONDITIONS AND GROUND SURFACE FEATURES FOR BAXER BOULEVARD AND BEDFORD STREET ARE BASED UPON SURVEYS COMPLETED BY OR FOR AND PROVIDED BY THE CITY OF PORTLAND.

REFERENCES:

Civil 3D 2013 Drawing Name:
17112 N.dwg, TAB:N1

CITY PROPERTY PLAN BOOK SHEETS:
I & I SHEETS: III-9, III-II

DESIGN BY: RLM
DRAWN BY: SAP
CHECKED BY: RAM
SCALE: 1" = 20'
DATE: 02. 16.2018

STATE OF MAINE — ROBERT A. McSORLEY No. 8588 — LICENSED PROFESSIONAL ENGINEER — 02. 16.2018

BEDFORD STREET
SEWER SEPERATION PROJECT

GENERAL NOTES AND
LEGEND

CITY OF PORTLAND, MAINE
PUBLIC WORKS DEPARTMENT
WATER RESOURCES DIVISION

RESURGAM — CITY OF PORTLAND, MAINE

SHEET #
2 OF 46

PLAN NUMBER

## EROSION CONTROL NOTES

THIS PLAN HAS BEEN DEVELOPED TO PROVIDE A STRATEGY FOR DEALING WITH SOIL EROSION AND SEDIMENTATION DURING AND AFTER THE STREET RECONSTRUCTION AND SEWER SEPARATION PROJECT. ALL SEDIMENT AND EROSION CONTROL MEASURES SHALL BE INSTALLED IN ACCORDANCE WITH "MAINE EROSION AND SEDIMENTATION CONTROL HANDBOOK FOR CONSTRUCTION: BEST MANAGEMENT PRACTICES" PUBLISHED BY THE CUMBERLAND COUNTY SOIL AND WATER DISTRICT AND MAINE DEPARTMENT OF ENVIRONMENTAL PROTECTION, LATEST EDITION. IT SHALL BE THE RESPONSIBILITY OF THE CONTRACTOR TO POSSES A COPY OF THE EROSION CONTROL PLAN AT ALL TIMES.

### PRE-CONSTRUCTION PHASE

1. PRIOR TO THE BEGINNING OF ANY CONSTRUCTION, SEDIMENT BARRIERS WILL BE STAKED/INSTALLED ACROSS THE SLOPE(S), ON THE CONTOUR AT OR JUST BELOW THE LIMITS OF CLEARING OR GRUBBING, AND/OR JUST ABOVE ANY ADJACENT PROPERTY LINE OR WATERCOURSE TO PROTECT AGAINST CONSTRUCTION RELATED EROSION. THE PLACEMENT OF SEDIMENT BARRIERS SHALL BE COMPLETED IN ACCORDANCE WITH GUIDELINES ESTABLISHED IN BEST MANAGEMENT PRACTICES AND IN ACCORDANCE WITH THIS EROSION CONTROL PLAN AND DETAILS IN THIS PLAN SET. THIS NETWORK IS TO BE MAINTAINED BY THE CONTRACTOR UNTIL ALL EXPOSED SLOPES HAVE AT LEAST 85%-90% VIGOROUS PERENNIAL VEGETATIVE COVER TO PREVENT EROSION. TEMPORARY EROSION CONTROL MEASURES SHALL BE REMOVED WITHIN 30 DAYS AFTER PERMANENT STABILIZATION IS ATTAINED.

2. PRIOR TO CONSTRUCTION, THE CONTRACTOR SHALL PREPARE A DETAILED SCHEDULE AND MARKED UP PLAN INDICATING AREAS AND COMPONENTS OF THE WORK AND KEY DATES SHOWING DATE OF DISTURBANCE AND COMPLETION OF THE WORK. THE CONTRACTOR SHALL SCHEDULE A PRE-CONSTRUCTION MEETING WITH THE MUNICIPAL STAFF. THREE COPIES OF THE SCHEDULE AND MARKED UP PLAN SHALL BE PROVIDED TO THE MUNICIPALITY THREE DAYS PRIOR TO THE SCHEDULED PRE-CONSTRUCTION MEETING. SPECIAL ATTENTION SHALL BE GIVEN TO THE 14 DAY LIMIT OF DISTURBANCE IN THE SCHEDULE ADDRESSING TEMPORARY AND PERMANENT VEGETATION MEASURES.

### CONSTRUCTION AND POST-CONSTRUCTION PHASE

1. IN ORDER TO PROTECT THE NATURAL RESOURCES IN THE PROJECT AREA, ONLY DISTURB THOSE AREAS NECESSARY TO CONSTRUCT THE ROAD, INSTALL LANDSCAPING, SIDEWALKS AND SPECIFIED PIPING.

2. AREAS UNDERGOING ACTUAL CONSTRUCTION SHALL ONLY EXPOSE THAT AMOUNT OF MINERAL SOIL NECESSARY FOR PROGRESSIVE AND EFFICIENT CONSTRUCTION. AN AREA CONSIDERED OPEN IS ANY AREA NOT STABILIZED WITH PAVEMENT, VEGETATION, MULCHING, EROSION CONTROL MATS, RIPRAP OR GRAVEL BASE ON A ROAD. OPEN AREAS SHALL BE ANCHORED WITH TEMPORARY EROSION CONTROL AS SHOWN ON THE DESIGN PLANS AND AS DESCRIBED WITHIN THIS EROSION CONTROL PLAN WITHIN 14-DAYS OF DISTURBANCE. AREAS LOCATED WITHIN 100' OF NATURAL RESOURCES SHALL BE ANCHORED WITH TEMPORARY EROSION CONTROL WITHIN SEVEN (7) DAYS. REFER TO WINTER EROSION CONTROL NOTES FOR THE TREATMENT OF OPEN AREAS AFTER OCTOBER 1ST OF THE CONSTRUCTION YEAR.

3. THOSE AREAS UNDERGOING ACTUAL CONSTRUCTION WILL BE LEFT IN AN UNTREATED OR UNVEGETATED CONDITION FOR A MAXIMUM OF 14 DAYS FROM FINAL GRADING OF THE LOAM. LOAM WILL BE STOCKPILED FOR FUTURE USE AND PROTECTED FROM EROSION LOSSES BY MULCH AND FILTER FABRIC/HAY BALE BARRIERS.

4. PRIOR TO ANY CLEARING OR GRUBBING, A STABILIZED CONSTRUCTION ENTRANCE/EXIT SHALL BE CONSTRUCTED AT THE INTERSECTION OF THE PROPOSED ENTRANCES AND EXISTING ROADWAY TO AVOID TRACKING OF MUD, DUST AND DEBRIS FROM THE SITE.

5. PRIOR TO CLEARING AND GRUBBING THE SITE, STORMDRAIN INLET PROTECTION SHALL BE INSTALLED AT ALL CATCH BASINS.

6. PRIOR TO CLEARING AND GRUBBING, SEDIMENT BARRIERS WILL BE INSTALLED ACROSS THE SLOPES, ON THE CONTOUR, AT OR JUST BELOW THE LIMITS OF CONSTRUCTION AND/OR JUST ABOVE ANY DOWNSLOPE ADJACENT PROPERTY OR WETLAND TO PROTECT AGAINST CONSTRUCTION RELATED EROSION.

7. THE CONTRACTOR MUST INSTALL ANY ADDED MEASURES WHICH MAY BE NECESSARY TO CONTROL EROSION/SEDIMENTATION FROM THE SITE DEPENDENT UPON THE ACTUAL SITE AND WEATHER CONDITIONS. CONTINUATION OF EARTHWORK OPERATIONS ON ADDITIONAL AREAS SHALL NOT BEGIN UNTIL THE EXPOSED SOIL SURFACE ON THE AREA BEING WORKED HAS BEEN STABILIZED, IN ORDER TO MINIMIZE AREAS WITHOUT EROSION CONTROL PROTECTION

8. DURING THE CONSTRUCTION PHASE, INTERCEPTED SEDIMENT WILL BE RETURNED TO THE SITE AND REGRADED ONTO OPEN AREAS. THE DISPOSAL OF POST SEEDING SEDIMENT, IF ANY SHALL, BE THE RESPONSIBILITY OF THE CONTRACTOR.

9. WHEN WORK IS IMMEDIATELY ADJACENT TO THE NATURAL RESOURCES, INCLUDING COASTAL WETLANDS, STREAMS AND HABITATS, CONSTRUCTION SITE MUST BE STABILIZED PRIOR TO THE END OF THE WORK DAY OR PRIOR TO ANY STORM EVENT. SEDIMENT BARRIERS SHALL BE PLACED BETWEEN ANY NATURAL RESOURCE AND THE DISTURBED AREA.

### EROSION CONTROL APPLICATIONS & MEASURES

THE PLACEMENT OF EROSION CONTROL MEASURES SHALL BE COMPLETED IN ACCORDANCE WITH GUIDELINES ESTABLISHED IN BEST MANAGEMENT PRACTICES, THE EROSION CONTROL PLAN AND DETAILS IN THE PLAN SET.

1. STABILIZED CONSTRUCTION ENTRANCE/EXIT:

   PRIOR TO CLEARING AND/OR GRUBBING THE SITE A STABILIZED CONSTRUCTION ENTRANCE/EXIT SHALL BE CONSTRUCTED WHEREVER TRAFFIC WILL EXIT THE CONSTRUCTION SITE ONTO A PAVED ROADWAY IN ORDER TO MINIMIZE THE TRACKING OF SEDIMENT AND DEBRIS FROM THE CONSTRUCTION SITE ONTO PUBLIC ROADWAYS. THE ENTRANCES AND ADJACENT ROADWAY AREAS SHALL BE PERIODICALLY SWEPT OR WASHED TO FURTHER MINIMIZE THE TRACKING OF MUD, DUST OR DEBRIS FROM THE CONSTRUCTION AREA. STABILIZED CONSTRUCTION EXITS SHALL BE CONSTRUCTED IN AREAS SPECIFIED ON THE PLANS AND AS DETAILED ON THE PLANS. PAYSON PARK ACCESS DRIVES SHALL NOT BE USED FOR CONSTRUCTION ACCESS.

2. TEMPORARY VEGETATION AND MULCH:

   IF FINAL SEEDING OF THE DISTURBED AREAS IS NOT COMPLETED BY SEPTEMBER 15TH OF THE YEAR OF CONSTRUCTION, THEN ON THAT DATE THESE AREAS WILL BE GRADED AND SMOOTHED, THEN SEEDED TO A WINTER COVER CROP OF RYE AT THE RATE OF 112 LBS/ACRE OR 3 LBS/1,000 SQUARE FEET AND MULCHED AT A RATE OF 70LBS./1000 SQUARE FEET. THE RYE SEEDING WILL PROCEED BY AN APPLICATION OF 3 TONS OF LIME AND 1000 LBS. OF 10-10-10 FERTILIZER PER ACRE, OR ITS EQUIVALENT. IF THE RYE SEEDING DOES NOT MAKE ADEQUATE GROWTH TO PROVE AT LEAST 75% VEGETATIVE COVER BY NOVEMBER 15TH, THEN ON THAT DATE, A TEMPORARY MULCH OF HAY WILL BE APPLIED TO THE AREA AT A RATE OF 150LBS./1000 SQUARE FEET. AREAS STABILIZED WITH RYE AND MULCH WILL BE TILLED AND RESEEDED USING THE VEGETATION PLAN FOR PERMANENT SEEDING THE FOLLOWING SPRING. FINAL VEGETATION OF THE SITE SHALL NOT BE CONSIDERED COMPLETE UNTIL EACH DISTURBED AREA NOT TO BE PAVED OR TREATED WITH RIPRAP HAS A VEGETATIVE COVER OVER AT LEAST 90% OF ITS SURFACE.

   ALL AREAS SEEDED DURING THE WINTER MONTHS WILL BE INSPECTED IN THE SPRING FOR ADEQUATE CATCH. ALL AREAS SUFFICIENTLY VEGETATED (LESS THAN 75 PERCENT CATCH) SHALL BE REVEGETATED BY REPLACING LOAM, SEED AND MULCH. IF DORMANT SEEDING IS NOT USED FOR THE SITE, ALL DISTURBED AREAS SHALL BE REVEGETATED IN THE SPRING.

   TEMPORARY MULCH WILL BE APPLIED TO ALL EXPOSED SOIL SURFACES WITHIN SEVEN (7) DAYS OR PRIOR TO ANY STORM EVENT.

3. SOIL STOCKPILES:

   STOCKPILES OF SOIL OR SUBSOIL SHALL BE MULCHED WITH HAY AT A RATE OF 75 LBS/1,000 S.F. (1.5 TONS PER ACRE) OR WITH A FOUR-INCH LAYER OF WOOD WASTE EROSION CONTROL MIX. THIS WILL BE DONE WITHIN 24 HOURS OF STOCKING AND REESTABLISHED PRIOR TO ANY RAINFALL. ANY SOIL STOCKPILE WILL NOT BE PLACED (EVEN COVERED WITH HAY OR STRAW) WITHIN 100 FEET FROM ANY NATURAL RESOURCES.

4. SEDIMENT BARRIERS:

   PRIOR TO THE BEGINNING OF ANY CONSTRUCTION, SILT FENCING SHALL BE STAKED ACROSS THE SLOPE(S), ON THE CONTOUR AT OR JUST BELOW THE LIMITS OF CLEARING OR GRUBBING, AND/OR JUST ABOVE ADJACENT WATERCOURSE TO PROTECT AGAINST CONSTRUCTION RELATED EROSION. MAXIMUM STAKE SPACING OF 6 FEET SHALL BE USED, UNLESS THE FENCE IS SUPPORTED BY WIRE FENCE REINFORCEMENT OF MINIMUM 14 GAUGE AND WITH A MAXIMUM MESH SPACING OF 6 INCHES, IN WHICH CASE STAKES MAY BE SPACED A MAXIMUM OF 10 FEET APART. SILT FENCING WITH A BOTTOM OF THE FENCE SHOULD BE PROPERLY ANCHORED A MINIMUM OF 6" PER THE PLAN DETAIL AND BACKFILLED.

   ALL SILT FENCE SHALL BE INSPECTED, REPLACED, AND/OR REPAIRED WEEKLY, AS WELL AS IMMEDIATELY FOLLOWING ANY SIGNIFICANT RAINFALL, OR WHEN SEDIMENT REACHES 1/3 THE BARRIER HEIGHT. ALL HAY BALE, FILTER FABRIC BARRIERS SHALL REMAIN IN PLACE UNTIL SEEDINGS HAVE BECOME 75% ESTABLISHED AND THEN REMOVED WITH IN 10 DAYS.

   ANY SILT FENCE IDENTIFIED BY THE OWNER OR REVIEWING AGENCIES AS NOT BEING PROPERLY INSTALLED DURING CONSTRUCTION SHALL BE IMMEDIATELY REPAIRED IN ACCORDANCE WITH THE INSTALLATION DETAILS.

5. STORMDRAIN INLET PROTECTION:

   SILT SACKS SHALL BE PLACED AROUND A STORMDRAIN DROP INLET OR CURB INLET PRIOR TO PERMANENT STABILIZATION OF THE IMMEDIATE AND UPSTREAM DISTURBED AREAS. THEY SHALL BE CONSTRUCTED IN A MANNER THAT WILL FACILITATE CLEAN-OUT AND DISPOSAL OF TRAPPED SEDIMENTS AND MINIMIZE INTERFERENCE WITH CONSTRUCTION ACTIVITIES. ANY RESULTANT PONDING OF WATER FROM THE PROTECTION METHOD MUST NOT CAUSE EXCESSIVE INCONVENIENCE OR DAMAGE TO ADJACENT AREAS OR STRUCTURES. INSTALL SILT SACKS IN ACCORDANCE WITH THE DETAIL AND PER MANUFACTURER'S RECOMMENDATIONS. INLET PROTECTION SHALL INCLUDE ADDITIONAL PROTECTION TO BLOCK SEDIMENT FROM FLOWING INTO CURB INLET STONES AND BYPASSING CATCH BASIN SILT SACKS. SEE EROSION CONTROL DETAILS.

6. DUST CONTROL:

   DUST CONTROL DURING CONSTRUCTION SHALL BE ACHIEVED BY THE USE OF A WATERING TRUCK TO PERIODICALLY SPRINKLE THE EXPOSED ROADWAY AREAS AS NECESSARY TO REDUCE DUST DURING THE DRY MONTHS. APPLYING OTHER DUST CONTROL PRODUCTS SUCH AS CALCIUM CHLORIDE OR OTHER MANUFACTURED PRODUCTS ARE ALLOWED IF AUTHORIZED BY THE PROPER LOCAL, STATE AND/OR FEDERAL REGULATING AGENCIES. HOWEVER, IT IS THE CONTRACTOR'S ULTIMATE RESPONSIBILITY TO MITIGATE DUST AND SOIL LOSS FROM THE SITE.

7. PERMANENT VEGETATION:

   REVEGETATION MEASURES SHALL COMMENCE IMMEDIATELY UPON COMPLETION OF FINAL GRADING OF AREAS TO BE LOAMED AND SEEDED. PERMANENT REVEGETATION MEASURES INCLUDING LOAM, SEED AND MULCH SHALL MEET SECTION 615 OF THE SPECIFICATIONS.

8. SEDIMENT TRACKING:

   CONTRACTOR SHALL BE REQUIRED TO HAVE A VACUUM STYLE SWEEPER ON-SITE AND CLEAN STREETS PERIODICALLY DURING EACH WORK DAY OR AT THE IMMEDIATE DIRECTION OF THE CITY ENGINEER OR INSPECTOR. THIS WORK SHALL BE INCIDENTAL TO SECTION 656 OF THE CONTRACT SPECIFICATIONS. NO EXTRA PAYMENT WILL BE MADE TO THE CONTRACTOR.

### TRENCH DEWATERING:

1. EXCAVATION, INSTALLATION OF STORM DRAINS AND ASSOCIATED STRUCTURES WILL REQUIRE CONTINUOUS DEWATERING THROUGHOUT CONSTRUCTION. CONTRACTOR IS RESPONSIBLE FOR PREPARING AND IMPLEMENTING A DEWATERING PLAN MEETING ENVIRONMENTAL REGULATIONS AND REQUIREMENTS STIPULATED WITHIN THE CONTRACT DOCUMENTS AND PLANS. PRIOR TO CONSTRUCTION, THE CONTRACTOR SHALL SUBMIT A WRITTEN DEWATERING PLAN AND SHALL MEET WITH CITY REPRESENTATIVES TO REVIEW THE DEWATERING PLAN. THE CONTRACTOR SHALL MAKE ADJUSTMENTS TO THE DEWATERING PLAN AS REQUIRED BY THE CITY OR OTHER AGENCIES. ANY REQUIRED CHANGES SHALL BE CONSIDERED INCIDENTAL TO THE COST OF DEWATERING AND NO EXTRA PAYMENT WILL BE MADE. ALL DEWATERING SHALL BE RUN THROUGH A PUMPED SEDIMENT REMOVAL SYSTEM EQUAL TO "DIRT BAG" OR ALTERNATIVE METHODS AS APPROVED BY THE ENGINEER. IT IS ANTICIPATED THAT HIGH VOLUMES OF PUMPING WILL BE REQUIRED FOR THE PROJECT. DISCHARGE LOCATIONS SHALL BE APPROVED BY THE ENGINEER PRIOR TO CONSTRUCTION. THE CONTRACTOR SHALL BE RESPONSIBLE FOR ALL WORK AND COSTS ASSOCIATED WITH DEWATERING THE JOBSITE INCLUDING ANY CHANGES, MODIFICATIONS OR SPECIAL DEWATERING SYSTEMS/REQUIREMENTS TO ENSURE THE SITE IS DEWATERED. THIS WORK SHALL BE CONSIDERED INCIDENTAL TO THE RELATED PAY ITEMS. WATER FROM CONSTRUCTION TRENCH DEWATERING WILL PASS FIRST THROUGH A SEDIMENTATION COLLECTION BAG PRIOR TO DISCHARGE. THE DISCHARGE SITE SHALL BE SELECTED TO AVOID FLOODING AND SEDIMENT DISCHARGES TO A PROTECTED RESOURCE. IN NO CASE SHALL THE SEDIMENTATION COLLECTION BAG BE LOCATED WITHIN 100 FEET OF A PROTECTED NATURAL RESOURCE UNLESS OTHERWISE APPROVED BY THE ENGINEER.

### MONITORING:

1. MAINTENANCE MEASURES WILL BE APPLIED AS NEEDED DURING THE ENTIRE CONSTRUCTION CYCLE. WEEKLY AND AFTER EACH RAINFALL, A VISUAL INSPECTION WILL BE MADE OF ALL INSTALLED EROSION CONTROL MEASURES AND REPAIRS WILL BE MADE AS NEEDED TO INSURE THEIR CONTINUING FUNCTION AS DESIGNED. FOLLOWING THE FINAL SEEDINGS, THE SITE WILL BE INSPECTED EVERY FIFTEEN DAYS UNTIL THE SEEDINGS HAVE BEEN ESTABLISHED. ESTABLISHED MEANS A MINIMUM OF 75% OF AREA VEGETATED WITH VIGOROUS GROWTH. RESEEDING WILL BE CARRIED OUT, WITH FOLLOW UP INSPECTIONS, IN THE EVENT OF ANY FAILURES. ALL EROSION CONTROL MEASURES WILL BE REMOVED WITHIN 10 DAYS WHEN VEGETATION IS ADEQUATELY ESTABLISHED.

## RIPRAP OUTLET CONSTRUCTION NOTES (REFER TO RIPRAP APRON DETAIL ON DETAIL SHEET)

### PRE-CONSTRUCTION

1. MEET ON SITE WITH OWNER, SITE CONTRACTOR, AND THE DESIGN ENGINEER TO DISCUSS SCOPE OF WORK AND EXPECTATIONS. DETERMINE LIMITS OF TIDAL "SPARTINA" GRASS.

2. CONTRACTOR SHALL HAVE ALL MATERIALS APPROVED BY THE DESIGN ENGINEER PRIOR TO INSTALLATION.

### CONSTRUCTION PHASE

1. STABILIZE DISTURBED AREAS IN ACCORDANCE WITH THE EROSION AND SEDIMENT CONTROL BMP MANUAL, LATEST EDITION. SEE THE EROSION & SEDIMENT CONTROL NOTES AND PLAN FOR ADDITIONAL REQUIREMENTS. . PROTECT NEARBY TREES, WHICH ARE PROPOSED TO REMAIN. TO THE EXTENT PRACTICAL, PROTECT THE ROOT ZONE OF THESE TREES.

2. THE CONTRACTOR SHALL CONSIDER THE TIDE SCHEDULE CAREFULLY; AND SHALL SCHEDULE WORK TO AVOID INTERRUPTIONS OF DAYLIGHT WORKING HOURS WITH HIGH TIDES. WORKING WITHIN TIDAL WATERS IS NOT PERMITTED.

3. THE CONTRACTOR SHALL ONLY WORK IN AREAS THAT CAN BE COMPLETED DURING EACH CONSTRUCTION DAY. NO AREAS SHALL BE EXCAVATED BY THE CONTRACTOR AND LEFT EXPOSED, AS THESE AREAS WILL BE SUBJECT TO EROSION FROM TIDAL SURGES OR STORM EVENTS.

4. WITHIN VEGETATIVE AREA PROPOSED TO BE DISTURBED, CAREFULLY REMOVE THE TOP ORGANIC LAYER (12"±) BELOW ELEVATION DETERMINED AT PRECONSTRUCTION MEETING. REMOVE USING METHOD THAT WILL KEEP THE VEGETATION SYSTEM INTACT. STOCKPILE THE ORGANIC LAYER IN A MANNER SO THAT MATERIAL CAN BE REUSED. REMOVE ONLY ENOUGH VEGETATION NEEDED TO INSTALL THE TIDE GATE VAULT AND SEWER PIPE IN ACCORDANCE WITH THE CROSS-SECTION. ORGANIC LAYER REMOVAL, STORAGE AND PLACEMENT SHALL BE INCIDENTAL TO THE RELATED PIPE PAY ITEM.
5. PIPE INSTALLATION: LOW PERMEABILITY DAMS OF NATURAL CLAY, BETONITE OR FLOWABLE FILL SHALL BE INSTALLED AS SHOWN TO MINIMIZE TIDAL FLOW THROUGH THE BACKFILL. DAMS SHALL EXTEND A MINIMUM 1 FOOT BELOW THE TRENCH BOTTOM, 1 FOOT BEYOND THE SIDEWALLS AND UP TO ELEVATION 7.4 OR TOP OF FINISHED GRADE. DAMS SHALL BE A MINIMUM OF 2 FEET THICKNESS. COSTS OF LOW PERMEABILITY DAMS SHALL BE INCIDENTAL TO THE CONTRACT.

6. INSTALL RIPRAP SLOPE IN ACCORDANCE WITH THE DETAILS. ONCE THE CHECK VALVE VAULT, SEWER PIPE, STORAGE CONDUIT AND RIPRAP SLOPE ARE COMPLETELY INSTALLED, THE CONTRACTOR SHALL GRADE THE DISTURBED AREAS UNIFORMLY TO MATCH EXISTING TOPOGRAPHY (U.N.O.) AND THE NEW RIPRAP EDGE.

7. PLACE EXISTING ORGANIC MATERIAL IN DISTURBED VEGETATIVE AREAS BELOW ELEVATION 10, WORKING FROM THE OUTFALL TO THE VAULT. DISTURBED VEGETATIVE AREAS ABOVE ELEVATION 10 SHALL HAVE LOAM AND SEED. ORGANIC LAYER REMOVAL, STORAGE AND PLACEMENT SHALL BE INCIDENTAL TO THE RELATED PIPE PAY ITEM.

8. INSPECT THE SITE EVERY TWO WEEKS FOR SIGNS OF EROSION AND ESTABLISHMENT OF VEGETATION. REPAIR ERODED AREAS AND REPLANT VEGETATION TO ESTABLISH 75% VEGETATION CATCH, AS REQUIRED.

9. IN AREAS REQUIRING REPLANTING, INSTALL NORTH AMERICAN GREEN C125BN EROSION CONTROL FABRIC OR APPROVED EQUAL IN ACCORDANCE WITH MANUFACTURER'S RECOMMENDATIONS (PAY ITEM 613.319).

10. USING RAZOR BLADE, CAREFULLY CUT HOLES 1 FOOT O.C. AND IN ROWS SPACED 1 FOOT APART. LOOSELY OFFSET HOLES BETWEEN ROWS FOR APPROXIMATELY 6-8 HOLES PER SQUARE YARD. PLANT CORD GRASS SPARTINA PATENS (SALT MEADOW GRASS) AND SPARTINA ALTERNIFLORA (SMOOTH CORDGRASS) PLUGS IN ALTERNATING FASHION. COSTS ASSOCIATED WITH CUTTING FABRIC AND PLANTING GRASS PLUGS WILL BE PAID THROUGH THE BID ITEM 615.072.

11. ALL WHEELED OR TRACKED EQUIPMENT THAT MUST TRAVEL OR WORK IN VEGETATED WETLAND AREAS MUST TRAVEL AND WORK ON MATS OR PLATFORMS IN ORDER TO PROTECT THE WETLAND VEGETATION.

## DEMOLITION NOTES

1. DEMOLITION OF EXISTING SEWER AND STORMDRAIN PIPE TO BE INCIDENTAL TO PIPE INSTALLATION.

2. EACH EXISTING DRAINAGE STRUCTURE OR SEWER STRUCTURE TO BE ABANDONED OR REMOVED WILL BE INCIDENTAL TO THE INSTALLATION OF NEW STRUCTURES.

3. DEMOLITION SHALL BE COMPLETED IN COORDINATION WITH NEW INFRASTRUCTURE. CONTRACTOR SHALL ENSURE EXISTING ROAD SURFACE DRAINAGE IS MAINTAINED DURING CONSTRUCTION. CONTRACTOR IS RESPONSIBLE FOR TEMPORARY DRAINAGE PROVISIONS. COSTS FOR TEMPORARY DRAINAGE PROVISIONS SHALL BE CONSIDERED INCIDENTAL TO THE CONTRACT.

## PORTLAND WATER DISTRICT NOTES

1. CONTRACTOR SHALL DISPOSE OF ALL EXCAVATED PIPING AND APPURTENANCES.
2. ALL MAINS AND SERVICES SHALL BE INSTALLED WITH 5.5' OF COVER MEASURED FROM PROPOSED ROAD GRADE UNLESS OTHERWISE APPROVED BY A PWD REPRESENTATIVE.
3. THE PORTLAND WATER DISTRICT WILL NOTIFY CUSTOMERS FOR ALL WORK INVOLVING TEMPORARY SHUT DOWN OF SERVICE. CUSTOMERS MUST RECEIVE AT LEAST 48 HOURS NOTIFICATION PRIOR TO ANY SHUT DOWN. THE DISTRICT MUST RECEIVE NOTICE FROM THE CONTRACTOR OF THE SHUT DOWN AT LEAST 48 HOURS PRIOR TO CUSTOMER NOTIFICATION.
4. ALL DUCTILE IRON PIPE AND FITTINGS SHALL BE POLYWRAPPED PER SPECIFICATIONS.
5. THE COST OF PROVIDING TEMPORARY WATER SERVICE TO THE BUILDINGS INDICATED ON THE PLAN SHALL BE INCIDENTAL TO CONTRCT. IF PROPERTIES REQUIRING A TEMPORARY WATER CONNECTION HAVE MALFUNCTIONING SILLCOCKS OR NO EXTERIOR PLUMBING, IT MAY BE NECESSARY TO EXCAVATE AND CONNECT INTO THE EXISTING SERVICE LINE BEHIND THE EXISTING SHUT-OFF VALVE TO PROVIDE TEMPORARY SERVICE.
6. PROVIDE TEMPORARY MAIN CONNECTION TO HYDRANT USING LL BRASS OR 304SS ADAPTER, 304SS NPT TO HDPE TRANSITION, AND FLANGED HDPE PIPING TO BRING PIPING ELEVATION FROM HYDRANT PORT TO GRADE. PROVIDING PIPING SUPPORTS/BLOCKING AT FITTINGS. HDPE SHALL BE AWWA C906, SDR11 WITH IPS FLANGE ADAPTERS AN DI BACKUP RINGS, DIMENSIONS PER AWWA C207. ALL PIPING AND FITTING SHALL BE NSF 61. PROVIDE FLANGED LL DOUBLE CHECK VALVE BACKFLOW DEVICE, SAME NOMINAL SIZE AS TEMP MAIN, AT EACH HYDRANT CONNECTED TO A TEMPORARY MAIN. PROVIDE FLANGED RESILIENT SEATED GATE VALVES FOR ISOLATION AND PROVIDE UPSTREAM AND DOWNSTREAM TAPS. REMOVE BACKFLOW ONLY UPON OWNER'S REQUEST AND PROVIDE FLANGED HDPE REPLACEMENT SPOOL PIECE. HDPE SHALL BE AWWA C906, SDR11, WITH IPS FLANGE ADAPTERS AND DI BACKUP RINGS. FLANGE DIMENSIONS PER AWWA C207. ALL PIPING AND FITTINGS SHALL BE NSF61. PROVIDE DOCUMENTATION OF ANNUAL INSPECTION BY A PERSON CERTIFIED BY THE NEW ENGLAND WATER WORKS ASSOCIATION OR AMERICAN BACKFLOW PREVENTION ASSOCIATION.
7. INSTALL 4" TEMPORARY FIRE DEPT CONNECTION (TYP.), 4" GATE VALVE, 90' ELBOW, RISER PIPE, 90' ELBOW, AND 4-1/2" NPT STEAMER PORT CONNECTION WITH CAP. ALL JOINTS TO BE RESTRAINED. STEAMER PORT, RISER AND TEE TO BE ANCHORED TO THE GROUND. OUTLET TO BE BETWEEN 1' AND 2' OFF THE GROUND.
8. REMOVE ALL OLD PIPING NOT EXPLICITLY CALLED OUT FOR ABANDONMENT.
9. TEMPORARY WATER SYSTEM SHALL ONLY BE ACTIVE BETWEEN APRIL 15TH AND OCTOBER 15TH. ALL WATER MAIN, EITHER EXISTING OR NEWLY INSTALLED, MUST BE ACTIVE, BETWEEN OCTOBER 16TH AND APRIL 14TH.
10. CONTRACTOR MUST ALLOW OWNERS SUFFICIENT TIME TO TRANSFER WATER SERVICES FROM EXISTING WATER MAIN TO TEMPORARY WATER SERVICES INSTALLED BY CONTRACTOR AND TO TRANSFER SERVICE TO NEW WATER MAIN/SERVICE LINE UPON SUCCESSFUL TESTING OF SAMPLE FOR ABSENCE OF BACTERIA. THE CONTRACTOR SHALL NOT CLAIM ANY DELAY-RELATED COSTS OR TIME RELATED TO THIS WORK.
11. REPLACE ALL SERVICES FROM MAIN TO STREET LINE, WITH 1" COPPER PIPING, UNLESS CALLED OUT TO BE REPLACED DIFFERENTLY.
12. VARIABLE MESSAGE BOARDS ARE TO BE PROVIDED IN ACCORDANCE WITH THE CITY SPECIFICATIONS THROUGHOUT THE PROJECT. PLACEMENT SHALL BE AT THE DIRECTION OF THE CITY'S TRAFFIC ENGINEER.
13. SIDEWALKS MUST REMAIN OPEN AT ALL TIMES OR MEASURABLE DETOURS PROVIDED. CONTRACTOR SHALL INSTALL ADA RAMPS OVER TEMPORARY WATER LINES AT ALL CROSSWALKS.
14. LOCATIONS OF UTILITIES OTHER THAN WATER ARE APPROXIMATE, AND NOT ALL UTILITIES ARE SHOWN. THE CONTRACTOR IS RESPONSIBLE FOR LOCATING, SUPPORTING AND PROTECTING ALL UTILITIES DURING INSTALLATION OF THE WATER MAIN.
15. HYDRANTS TO BE REMOVED SHALL BE SALVAGED FOR PORTLAND WATER DISTRICT USE & DELIVERED TO THEIR OFFICE AS PART OF CONTRACT.

## PERMIT TIMING NOTES - BACK COVE OUTFALL

1. CONSTRUCTION OF THE STORM DRAIN OUTFALLS SHALL BE COMPLETE BY MAY 1, 2018. THIS INCLUDES INSTALLATION OF THE PIPES, RIP-RAP APRON, RESTORATION AND STABILIZATION OF THE EMBANKMENTS.
2. THE WORK MAY NOT OCCUR BETWEEN JULY 15 AND SEPTEMBER 15 WITHOUT APPROVAL BY THE MAINE DEPARTMENT OF INLAND FISHERIES AND WILDLIFE.
3. SEE APPENDIX B OF THE CONTRACT SPECIFICATIONS FOR FULL PERMITS.

## DEPARTMENT OF ENVIRONMENTAL PROTECTION PERMIT BY RULE: SECTION 7 NOTES

1. THE FOLLOWING MEASURES MUST BE TAKEN TO PREVENT EROSION OF SOIL OR FILL MATERIAL FROM THE DISTURBED AREAS INTO THE RESOURCE:

   (a) STAKED HAY BALES OR SILT FENCE MUST BE PROPERLY INSTALLED BETWEEN THE AREA OF SOIL DISTURBANCE AND THE EDGE OF THE RESOURCE BEFORE THE ACTIVITY BEGINS;

   (b) HAY BALES OR SILT FENCE BARRIERS MUST BE MAINTAINED UNTIL THE DISTURBED AREA IS PERMANENTLY STABILIZED;

   (c) WITHIN 7 CALENDAR DAYS FOLLOWING THE COMPLETION OF ANY SOIL DISTURBANCE, AND PRIOR TO ANY STORM EVENT, MULCH MUST BE SPREAD ON ANY EXPOSED SOILS;

   (d) ALL DISTURBED SOILS MUST BE PERMANENTLY STABILIZED; AND

   (e) WITHIN 30 DAYS OF FINAL STABILIZATION OF THE SITE, ANY SILT FENCE MUST BE REMOVED.

4. DISTURBANCE OF WETLAND VEGETATION MUST BE AVOIDED IF POSSIBLE. IF WETLAND VEGETATION MUST BE DISTURBED DURING THE ACTIVITY, IT MUST BE REESTABLISHED IMMEDIATELY UPON COMPLETION OF THE ACTIVITY AND MUST BE MAINTAINED.
3. NON-NATIVE WETLAND PLANTS MAY NOT BE PLANTED IN DISTURBED AREAS.
4. THE TRENCH WIDTH IN ANY PROTECTED NATURAL RESOURCE MUST BE NO WIDER THAN NECESSARY TO INSTALL THE DEVICE.
5. THE TRENCH IN AND ADJACENT TO THE PROTECTED NATURAL RESOURCE MUST BE REFILLED WITH THE MATERIAL THAT WAS EXCAVATED. THE ORIGINAL GRADING AND ELEVATION OF THE WETLAND MUST BE RESTORED. RESIDUAL FILL MATERIAL MUST BE REMOVED FROM THE WETLAND OR WATER BODY AND PROPERLY STABILIZED. PIPE BEDDING MATERIAL SUCH AS CRUSHED STONE OR SAND MAY BE USED PROVIDED CLAY DAMS OR SYNTHETIC BOOTS ARE USED WHERE APPROPRIATE TO PREVENT WETLAND DRAINING THROUGH THE BEDDING MATERIAL.
6. BLASTING IN INUNDATED AREAS IS PROHIBITED.
7. THE OUTFALL STRUCTURE MAY NOT INTERFERE WITH ANY POTENTIAL BOAT USAGE OF THE PROJECT SITE.
8. WHEELED OR TRACKED EQUIPMENT MAY NOT OPERATE IN THE WATER. EQUIPMENT OPERATING ON THE SHORE MAY REACH INTO THE WATER WITH A BUCKET OR SIMILAR EXTENSION. EQUIPMENT MAY CROSS STREAMS ON ROCK, GRAVEL OR LEDGE BOTTOM.
9. ALL WHEELED OR TRACKED EQUIPMENT THAT MUST TRAVEL OR WORK IN A VEGETATED WETLAND AREA MUST TRAVEL AND WORK ON MATS OR PLATFORMS IN ORDER TO PROTECT WETLAND VEGETATION.
10. WORK BELOW THE HIGH WATER LINE OF A GREAT POND, RIVER, STREAM OR BROOK MUST BE DONE AT LOW WATER EXCEPT AS REQUIRED FOR EMERGENCY FLOOD CONTROL WORK. MEASURES, SUCH AS A SILT BOOM OR STAKED FENCING, MUST BE EMPLOYED TO REDUCE AND ISOLATE TURBIDITY.
11. MAINTENANCE CLEARING OF DEPOSITED DEBRIS AND SEDIMENTS FROM THE OUTFALL AREA IS ALLOWED PROVIDED THE CLEARED MATERIALS ARE REMOVED FROM THE RESOURCE. ANY DEBRIS GENERATED DURING THE ACTIVITY MUST BE PREVENTED FROM WASHING DOWNSTREAM AND MUST BE REMOVED FROM THE WETLAND OR WATER BODY. DISPOSAL OF DEBRIS MUST BE IN CONFORMANCE WITH MAINE HAZARDOUS WASTE, SEPTAGE AND SOLID WASTE MANAGEMENT ACT, 38 M.R.S.A. SECTION 1301 ET SEQ.
12. UNCURED CONCRETE MAY NOT BE PLACED DIRECTLY INTO THE WATER. CONCRETE MUST BE PRE-CAST AND CURED AT LEAST THREE WEEKS BEFORE PLACING IN THE WATER, OR WHERE NECESSARY, MUST BE PLACED IN FORMS AND CURED AT LEAST ONE WEEK BEFORE THE FORMS ARE REMOVED. NO WASHING OF TOOLS, FORMS, ETC. MAY OCCUR IN OR ADJACENT TO THE WATERBODY OR WETLAND.
13. IF THE ACTIVITY OCCURS WITHIN TIDAL WATERS, THE ACTIVITY MUST OCCUR DURING THE TIME PERIOD APPROVED BY THE DEPARTMENT OF MARINE RESOURCES.

## SECTION 20 NOTES

FOR ACTIVITIES IN, ON OR OVER A SHOREBIRD NESTING, FEEDING, AND STAGING AREA BETWEEN JULY 15 AND SEPTEMBER 15, THE ACTIVITY MUST OCCUR DURING THE TIME PERIOD APPROVED BY THE DEPARTMENT OF INLAND FISHERIES AND WILDLIFE.

FOR NEW ACTIVITIES IN A MODERATE VALUE INLAND WATERFOWL AND WADING BIRD HABITAT THAT TAKE PLACE BETWEEN APRIL 15 AND JULY 31 OF ANY YEAR, NOTICE OF APPROVAL OF THE TIMING OF THE ACTIVITY FROM THE DEPARTMENT OF INLAND FISHERIES AND WILDLIFE MUST BE SUBMITTED TO THE DEP WITH THE NOTIFICATION FORM.

(4) EXCEPT FOR CUTTING OR REMOVAL OF VEGETATION ALLOWED PURSUANT TO PARAGRAPH C(6) OF THIS SECTION, CUTTING OR REMOVAL OF VEGETATION WITHIN A HIGH OR MODERATE VALUE INLAND WATERFOWL AND WADING BIRD HABITAT, OR SHOREBIRD ROOSTING BUFFER, IS LIMITED TO:

(A) REMOVAL OF A SAFETY HAZARD; OR

(B) CUTTING OR REMOVAL OF VEGETATION TO ALLOW FOR A FOOTPATH NOT TO EXCEED 6 FEET IN WIDTH AS MEASURED BETWEEN TREE TRUNKS AND SHRUB STEMS. THE FOOTPATH MAY NOT RESULT IN A CLEARED LINE OF SIGHT TO THE WATER.

ANY CUTTING OR REMOVAL OF VEGETATION WITHIN A SHOREBIRD ROOSTING BUFFER UNDER THIS PARAGRAPH MUST BE DONE IN CONSULTATION WITH AND AS APPROVED BY THE DEPARTMENT OF INLAND FISHERIES AND WILDLIFE.

(5) CUTTING OR REMOVAL OF VEGETATION WITHIN A SHOREBIRD FEEDING BUFFER MUST MEET THE VEGETATIVE SCREENING STANDARDS SET FORTH IN MANDATORY SHORELAND ZONING, 38 M.R.S.A. §439-A(6). IN INTERPRETING AND ENFORCING THESE STANDARDS, THE DEPARTMENT SHALL RELY UPON THE DEPARTMENT'S SHORELAND ZONING RULES REGARDING CUTTING OR REMOVAL OF VEGETATION FOR ACTIVITIES OTHER THAN TIMBER HARVESTING GUIDELINES FOR MUNICIPAL SHORELAND ZONING ORDINANCES, 06-096 CMR 1000(15)(P) (CHAPTER LAST AMENDED MAY 1, 2006). AND APPLY THE CUTTING STANDARDS APPLICABLE WITHIN 75 FEET OF A COASTAL WETLAND TO THE ENTIRE 100-FOOT FEEDING BUFFER.

REFERENCES:

Civil 3D 2013 Drawing Name: 17112_N.dwg; TAB:N2

CITY PROPERTY PLAN BOOK SHEETS:
I & I SHEETS: III-9, III-II

03/07/18 RAM ISSUE ADDENDUM #2
02/23/18 RAM ISSUE ADDENDUM #1

| | |
|---|---|
| DESIGN BY: | RJM |
| DRAWN BY: | SAP |
| CHECKED BY: | RAM |
| SCALE: | 1" = 20' |
| DATE: | 02.16.2018 |

STATE OF MAINE — ROBERT MCGORLEY — No. 8588 — LICENSED — PROFESSIONAL ENGINEER — 03.07.2018

BEDFORD STREET
SEWER SEPERATION PROJECT

EROSION CONTROL NOTES AND
PORTLAND WATER DISTRICT NOTES

CITY OF PORTLAND, MAINE
PUBLIC WORKS DEPARTMENT
WATER RESOURCES DIVISION

SHEET #
3 OF 46

PLAN NUMBER

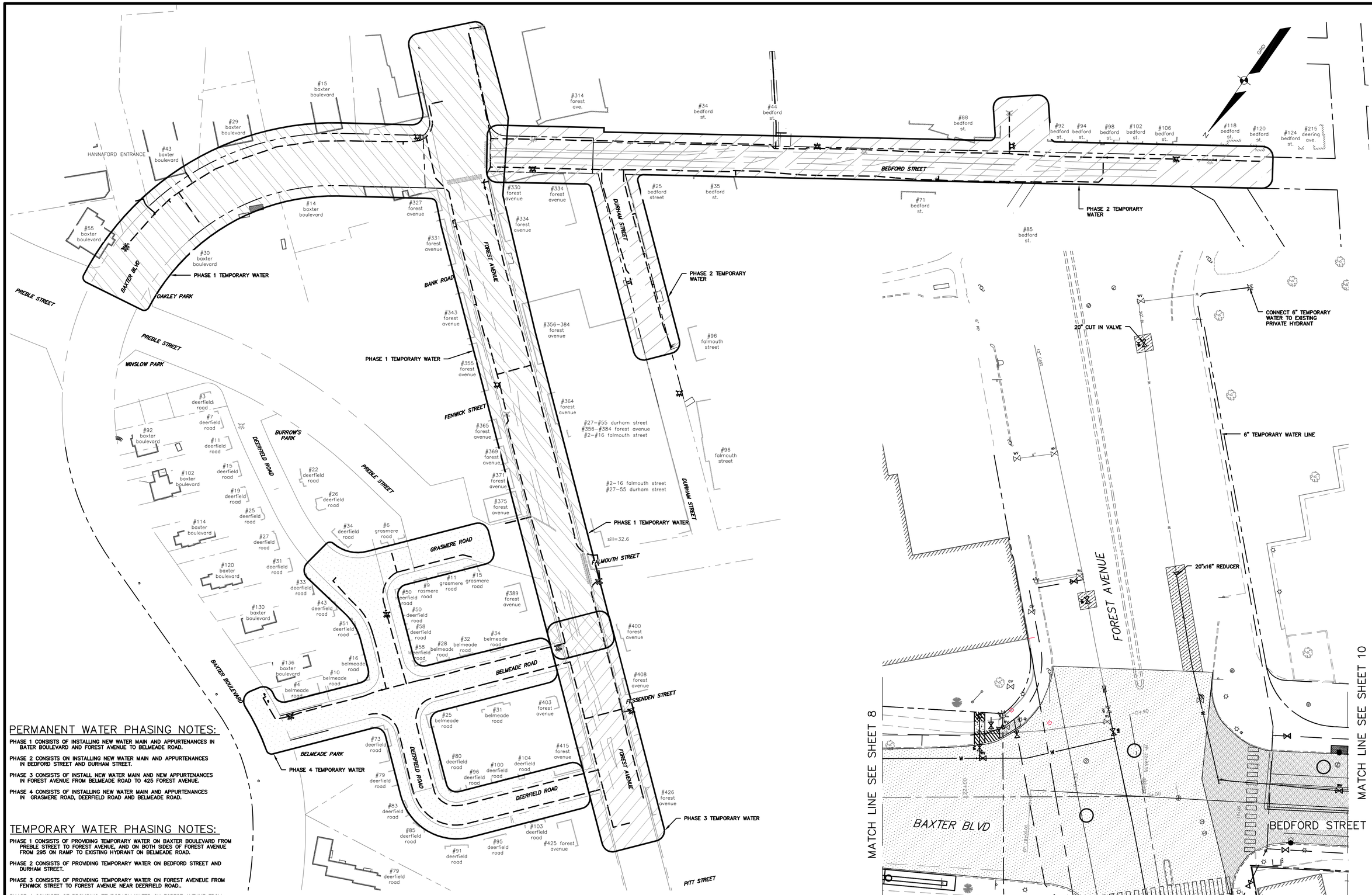


## PERMANENT WATER PHASING NOTES:

PHASE 1 CONSISTS OF INSTALLING NEW WATER MAIN AND APPURTENANCES IN BAXTER BOULEVARD AND FOREST AVENUE TO BELMEADE ROAD.

PHASE 2 CONSISTS ON INSTALLING NEW WATER MAIN AND APPURTENANCES IN BEDFORD STREET AND DURHAM STREET.

PHASE 3 CONSISTS OF INSTALL NEW WATER MAIN AND NEW APPURTENANCES IN FOREST AVENUE FROM BELMEADE ROAD TO 425 FOREST AVENUE.

PHASE 4 CONSISTS OF INSTALLING NEW WATER MAIN AND APPURTENANCES IN GRASMERE ROAD, DEERFIELD ROAD AND BELMEADE ROAD.

## TEMPORARY WATER PHASING NOTES:

PHASE 1 CONSISTS OF PROVIDING TEMPORARY WATER ON BAXTER BOULEVARD FROM PREBLE STREET TO FOREST AVENUE, AND ON BOTH SIDES OF FOREST AVENUE FROM 295 ON RAMP TO EXISTING HYDRANT ON BELMEADE ROAD.

PHASE 2 CONSISTS OF PROVIDING TEMPORARY WATER ON BEDFORD STREET AND DURHAM STREET.

PHASE 3 CONSISTS OF PROVIDING TEMPORARY WATER ON FOREST AVENEUE FROM FENWICK STREET TO FOREST AVENUE NEAR DEERFIELD ROAD..

PHASE 4 CONSISTS OF PROVIDING TEMPORARY WATER ON FOREST AVENUE FROM BELMEADE ROAD TO PITT STREET, BELMREADE ROAD, DEERFIELD, GRASMERE ROAD AND BAXTER BOULEVARD AT BELMEADE ROAD.

TEMPORARY WATER PHASING PLAN

SCALE: 1"=80'

PLAN

SCALE: 1"=20'

FEBRUARY 2018

Civil 3D 2018 Drawing Name:
17112 TEMP WATER PHASE.dwg, TAB:TEMP PHASE

CITY PROPERTY PLAN BOOK SHEETS:
I & J SHEETS: III-9, III-11

02/23/18 RAM ISSUE ADDENDUM #1

REFERENCES:

| | |
|---|---|
| DESIGN BY: | BLM |
| DRAWN BY: | RAM |
| CHECKED BY: | RAM |
| SCALE: | 1" = 20' |
| DATE: | 02. 16. 2018 |

STATE OF MAINE
ROBERT A. MOSER
No. 8058
LICENSED
PROFESSIONAL ENGINEER
02. 23. 2018

BEDFORD STREET
SEWER SEPERATION PROJECT

TEMPORARY WATER PHASING PLAN

CITY OF PORTLAND, MAINE
PUBLIC WORKS DEPARTMENT
WATER RESOURCES DIVISION

CITY OF PORTLAND, MAINE
RESURGAM

SHEET #
4 OF 46

PLAN NUMBER

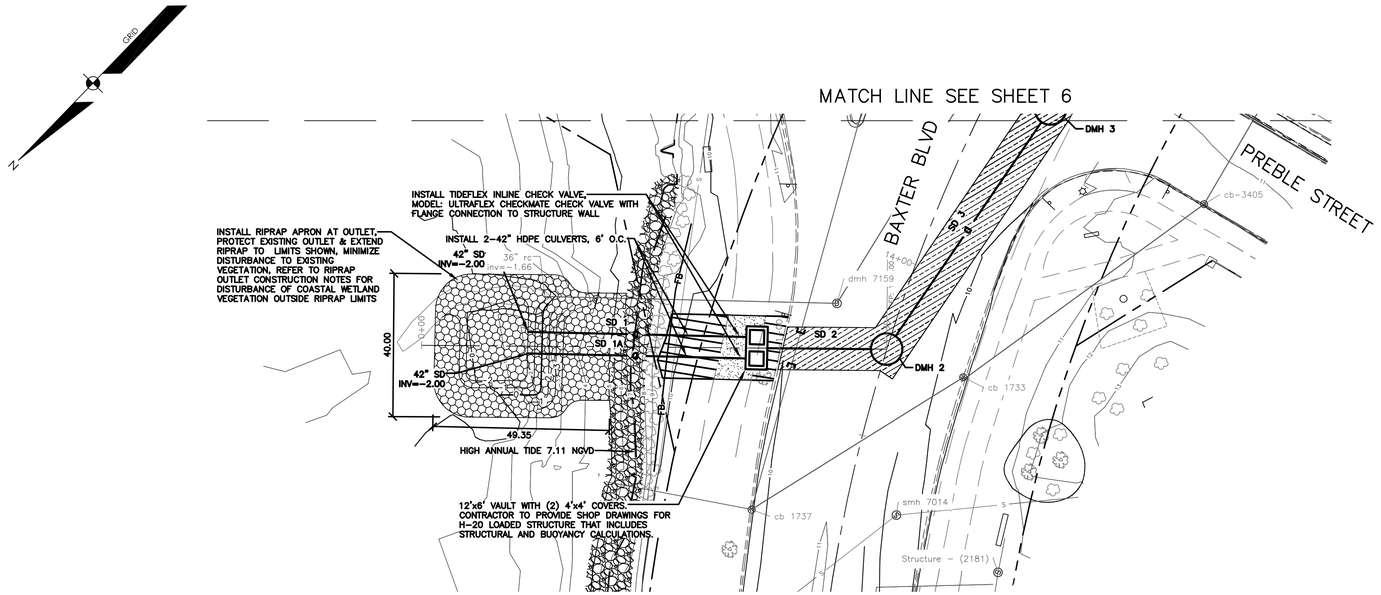


PLAN
SCALE: 1"=20'

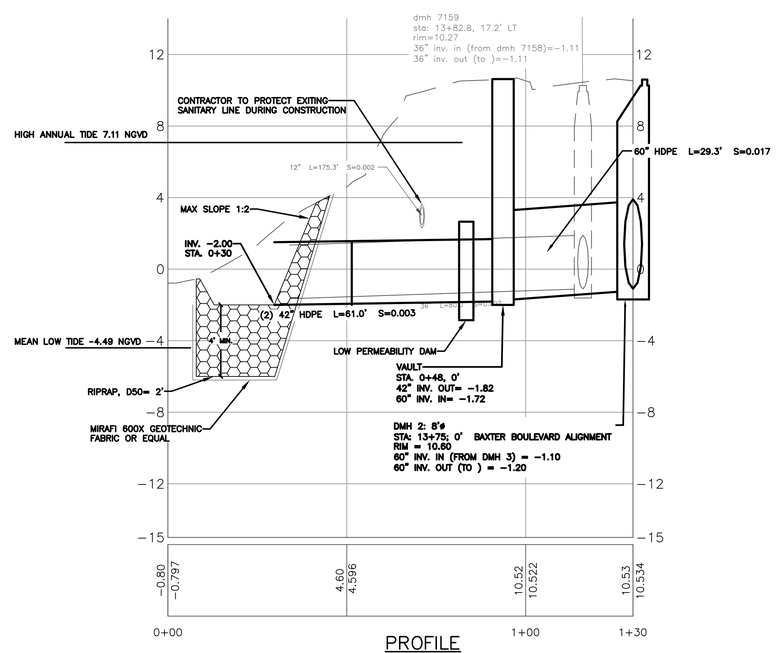


PROFILE
SCALE: HORZ. 1"=20'
VERT 1"=4'

03/07/18 RAM ISSUE ADDENDUM #2

REFERENCES:

Civil 3D 2013 Drawing Name:
17112 PP BAXTER BLVD.dwg, TAB:BAXTER BLVD OUTFALL

CITY PROPERTY PLAN BOOK SHEETS:
1 & 1 SHEETS: III-9, III-11

FEBRUARY 2018

| | |
|---|---|
| DESIGN BY: | RLM |
| DRAWN BY: | SAB |
| CHECKED BY: | RAM |
| SCALE: | 1" = 20' |
| DATE: | 02. 15. 2018 |

STATE OF MAINE
ROBERT A. MUSCHELLA
No. 8258
PROFESSIONAL ENGINEER
03. 07. 2018

# BEDFORD STREET SEWER SEPERATION PROJECT

PLAN & PROFILE - BAXTER BOULEVARD OUTFALL

CITY OF PORTLAND, MAINE
PUBLIC WORKS DEPARTMENT
WATER RESOURCES DIVISION

SHEET #
5 OF 46

PLAN NUMBER

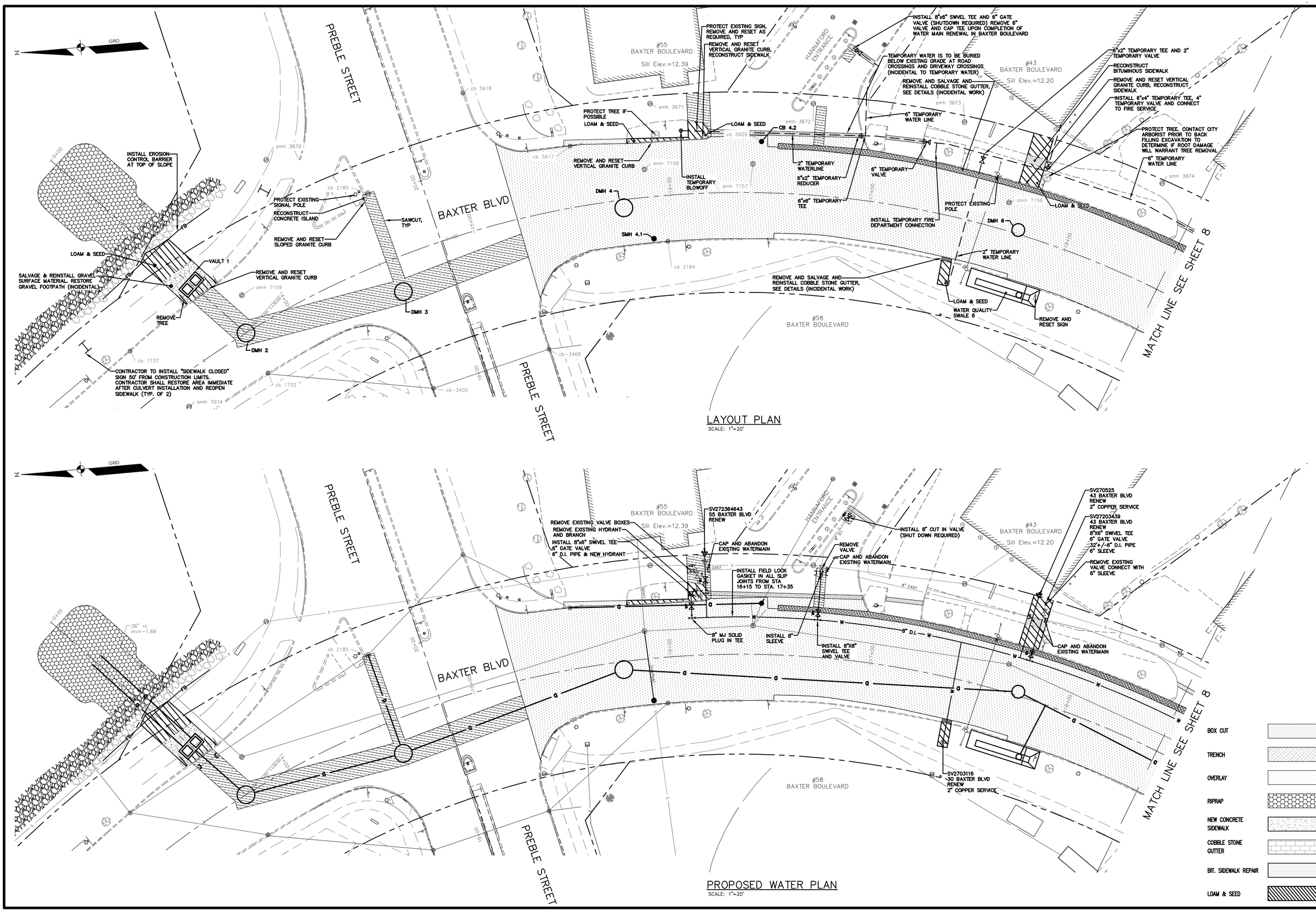


FEBRUARY 2018

Civil 3D 2013 Drawing Name:
17112 PP BAXTER BLVD.dwg, TAB:BAXTER BLVD L01

CITY PROPERTY PLAN BOOK SHEETS:
I & I SHEETS: III-9, III-11

03/07/18 RAM: ISSUE ADDENDUM #2

REFERENCES:

| DESIGN BY: | DRAWN BY: | CHECKED BY: | SCALE: | DATE: |
|---|---|---|---|---|
| RAM | SAP | RAM | 1" = 20' | 02.16.2018 |

STATE OF MAINE ROBERT A. MCSORLEY LICENSED PROFESSIONAL ENGINEER 03.07.2018

# BEDFORD STREET SEWER SEPERATION PROJECT

BAXTER BOULEVARD LAYOUT & WATER PLAN

CITY OF PORTLAND, MAINE
PUBLIC WORKS DEPARTMENT
WATER RESOURCES DIVISION

CITY OF PORTLAND, MAINE · DIRIGO · RESURGAM

SHEET # 6 OF 46

PLAN NUMBER

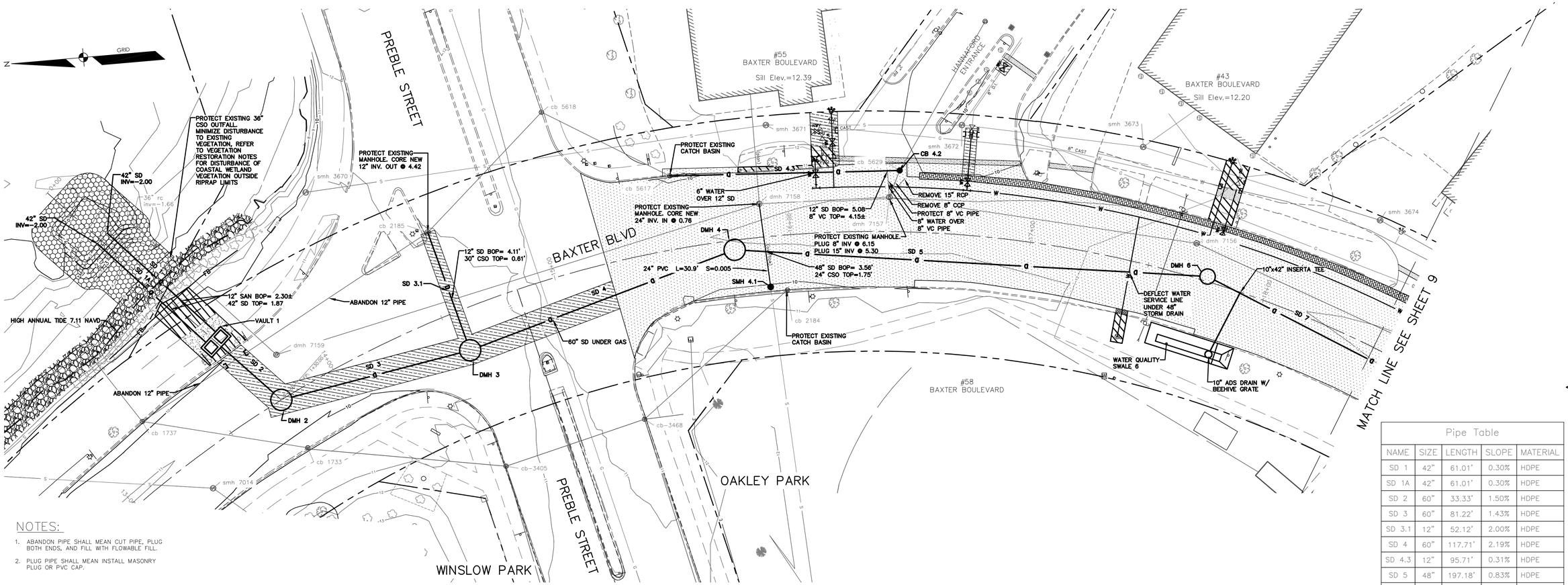


## NOTES:

1. ABANDON PIPE SHALL MEAN CUT PIPE, PLUG BOTH ENDS, AND FILL WITH FLOWABLE FILL.
2. PLUG PIPE SHALL MEAN INSTALL MASONRY PLUG OR PVC CAP.

## PLAN

SCALE: 1"=20'

| Pipe Table | | | | |
|---|---|---|---|---|
| NAME | SIZE | LENGTH | SLOPE | MATERIAL |
| SD 1 | 42" | 61.01' | 0.30% | HDPE |
| SD 1A | 42" | 61.01' | 0.30% | HDPE |
| SD 2 | 60" | 33.33' | 1.50% | HDPE |
| SD 3 | 60" | 81.22' | 1.43% | HDPE |
| SD 3.1 | 12" | 52.12' | 2.00% | HDPE |
| SD 4 | 60" | 117.71' | 2.19% | HDPE |
| SD 4.3 | 12" | 95.71' | 0.31% | HDPE |
| SD 5 | 48" | 197.18' | 0.83% | HDPE |
| SD 7 | 48" | 154.64' | 0.76% | HDPE |

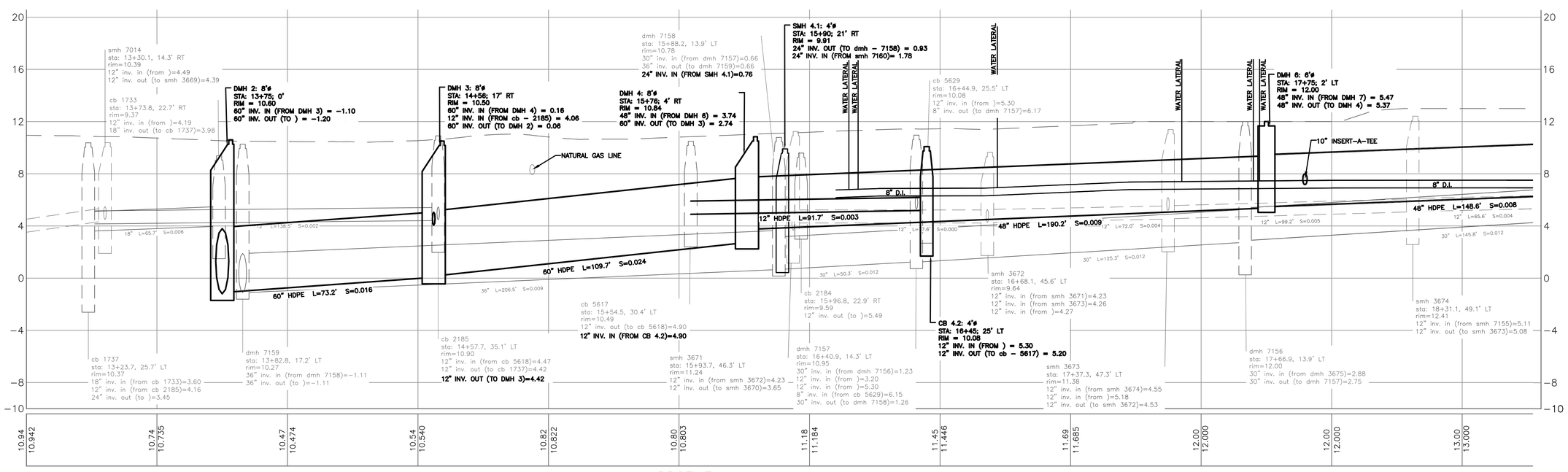


## PROFILE

SCALE: HORZ. 1"=20'
VERT 1"=4'

03/07/18 RAM: ISSUE ADDENDUM #2

REFERENCES:

Civil 3D 2013 Drawing Name:
17112 PP BAXTER BLVD.dwg, TAB:BAXTER BLVD PP1

CITY PROPERTY PLAN BOOK SHEETS:
I & I SHEETS: III-9, III-11

FEBRUARY 2018

DESIGN BY: RJM
DRAWN BY: SJP
CHECKED BY: RJM
SCALE: 1" = 20'
DATE: 02.16.2018

STATE OF MAINE ROBERT J. McSORLEY No. 6082 LICENSED PROFESSIONAL ENGINEER

03.07.2018

# BEDFORD STREET SEWER SEPERATION PROJECT

PLAN & PROFILE - BAXTER BOULEVARD STA. 14+00 TO STA. 18+50

CITY OF PORTLAND, MAINE
PUBLIC WORKS DEPARTMENT
WATER RESOURCES DIVISION

CITY OF PORTLAND MAINE — RESURGAM

SHEET # 7 OF 46

PLAN NUMBER

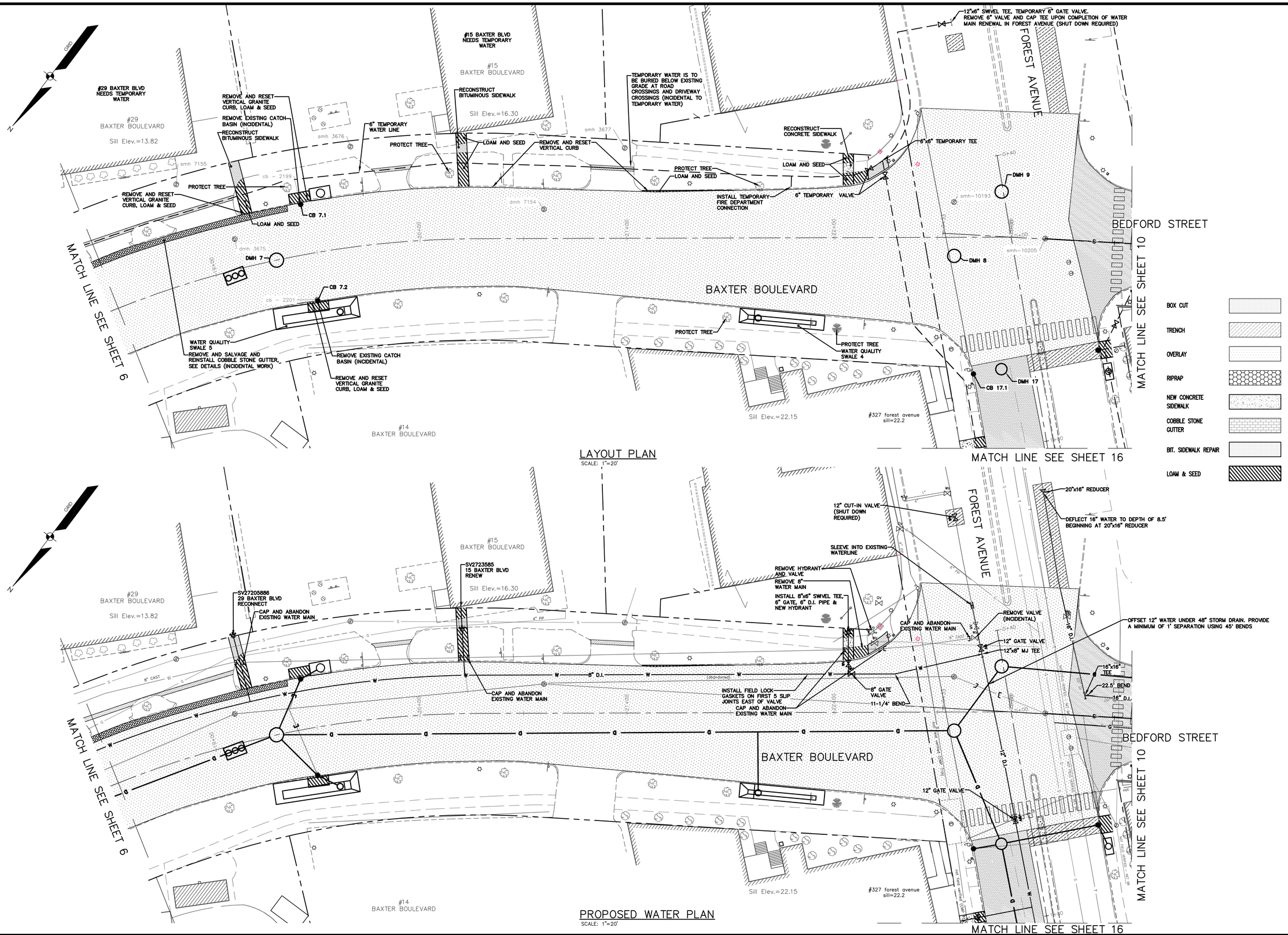


LAYOUT PLAN
SCALE: 1"=20'




PROPOSED WATER PLAN
SCALE: 1"=20'

FEBRUARY 2018

Civil 3D 2013 Drawing Name:
17112 PP BAXTER BLVD.dwg, TAB:BAXTER BLVD LO2

CITY PROPERTY PLAN BOOK SHEETS:
I & J SHEETS: III-9, III-11

02/23/18 RAM ISSUE ADDENDUM #1

REFERENCES:

| DESIGN BY: | DRAWN BY: | CHECKED BY: | SCALE: | DATE: |
|---|---|---|---|---|
| RLM | SAR | RAM | 1"= 20' | 02. 16. 2018 |

STATE OF MAINE — ROBERT L. MUSSELMAN — No. 8058 — PROFESSIONAL ENGINEER — 02. 23. 2018

# BEDFORD STREET SEWER SEPERATION PROJECT

BAXTER BOULEVARD LAYOUT & WATER PLAN

CITY OF PORTLAND, MAINE
PUBLIC WORKS DEPARTMENT
WATER RESOURCES DIVISION

OMNIA RESURGAM — CITY OF PORTLAND, MAINE

SHEET #
8 OF 46

PLAN NUMBER

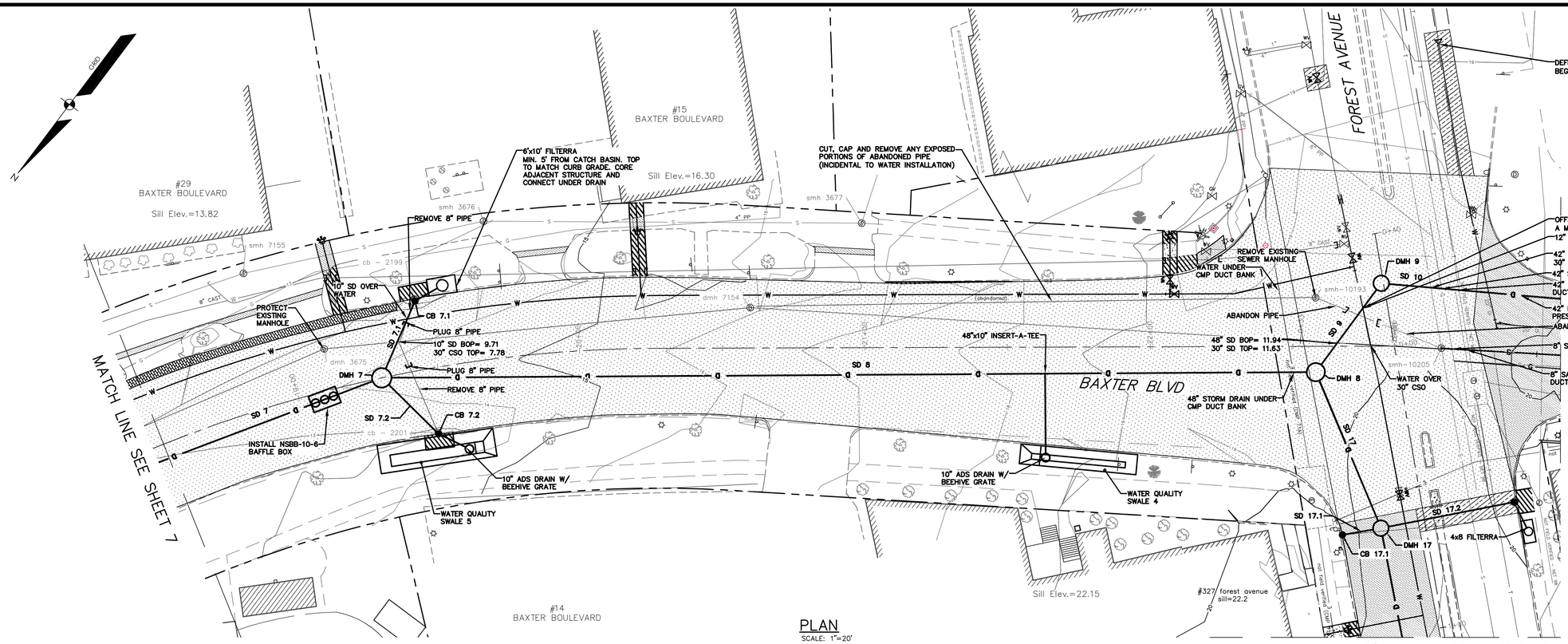


## PLAN

SCALE: 1"=20'

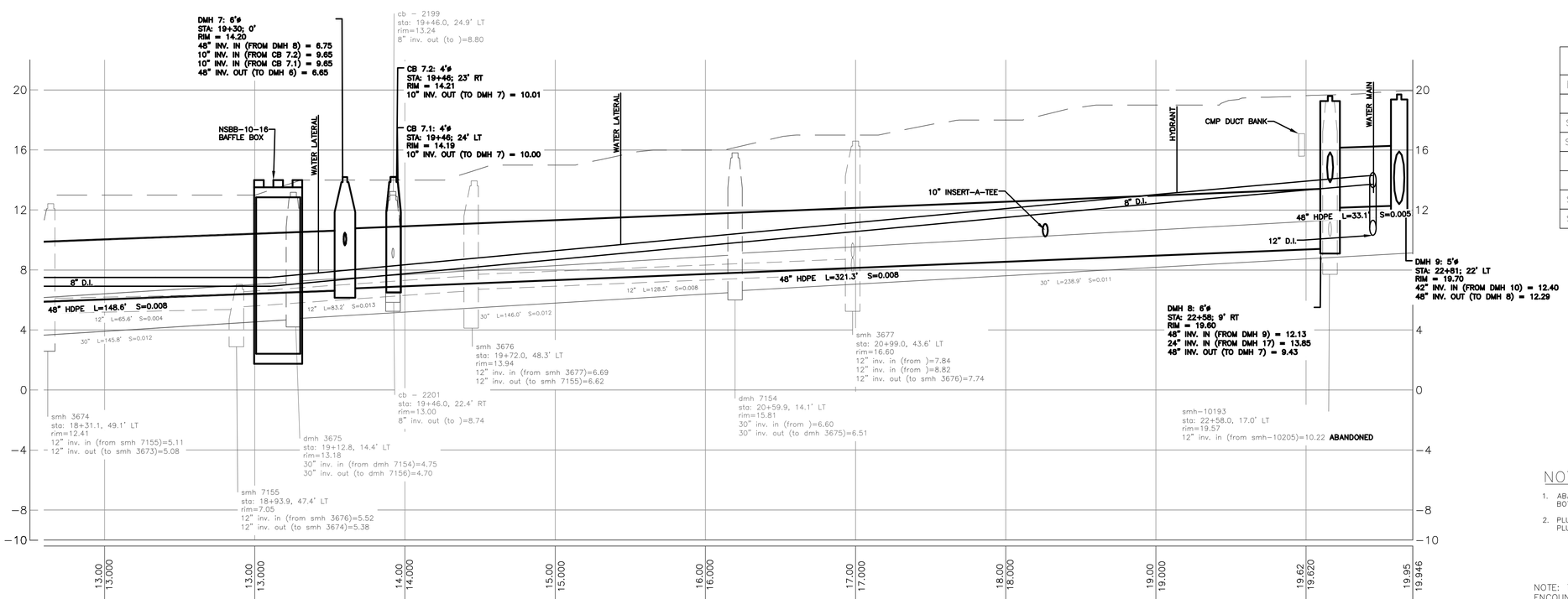


## PROFILE

SCALE: HORZ. 1"=20'
VERT 1"=4'

| Pipe Table | | | | |
|---|---|---|---|---|
| NAME | SIZE | LENGTH | SLOPE | MATERIAL |
| SD 7 | 48" | 154.64' | 0.76% | HDPE |
| SD 7.1 | 10" | 29.34' | 1.19% | HDPE |
| SD 7.2 | 10" | 27.98' | 1.30% | HDPE |
| SD 8 | 48" | 327.31' | 0.82% | HDPE |
| SD 9 | 48" | 38.60' | 0.41% | HDPE |
| SD 10 | 42" | 90.89' | 0.00% | D.I. |
| SD 17 | 24" | 59.23' | 0.59% | HDPE |

## NOTES:

1. ABANDON PIPE SHALL MEAN CUT PIPE, PLUG BOTH ENDS, AND FILL WITH FLOWABLE FILL.
2. PLUG PIPE SHALL MEAN INSTALL MASONRY PLUG OR PVC CAP.

NOTE: THAT CONTRACTOR MAY ENCOUNTER REMNANT PORTLAND RAIL COMPANY RAILROAD TRACKS TO THE EAST OF THE CENTER LINE OF FOREST AVENUE.

REFERENCES:

Civil 3D 2013 Drawing Name:
171172 PP BAXTER BLVD.dwg, TAB:BAXTER BLVD PP2

CITY PROPERTY PLAN BOOK SHEETS:
I & I SHEETS: III-9, III-11

FEBRUARY 2018

DESIGN BY: BLM
DRAWN BY: SJM
CHECKED BY: BLM
SCALE: 1" = 20'
DATE: 02.16.2018

STATE OF MAINE
ROBERT L. MCCARTHY
LICENSED
PROFESSIONAL ENGINEER
No. 8258
02.16.2018

# BEDFORD STREET SEWER SEPERATION PROJECT

PLAN & PROFILE - BAXTER BOULEVARD STA. 18+50 STO STA. 22+85.55

CITY OF PORTLAND, MAINE
PUBLIC WORKS DEPARTMENT
WATER RESOURCES DIVISION

CITY OF PORTLAND, MAINE
RESURGAM

SHEET # 9 OF 46

PLAN NUMBER

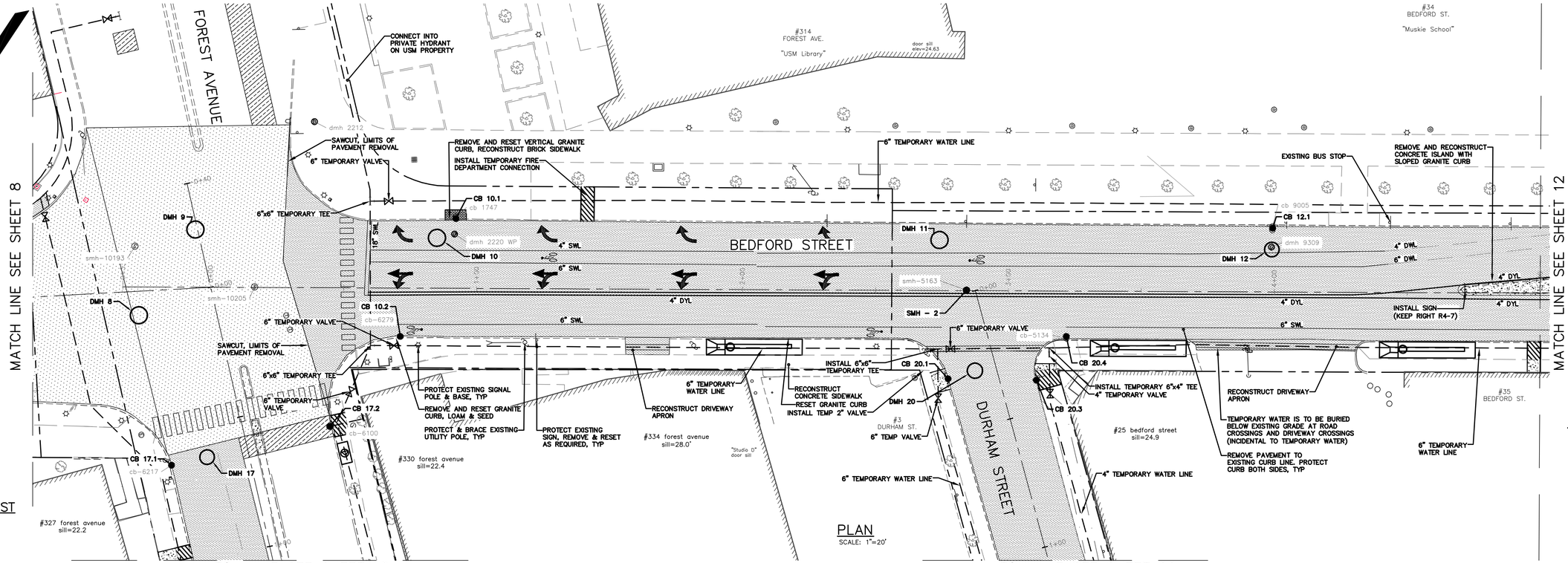


PLAN
SCALE: 1"=20'

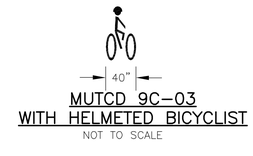


MUTCD 9C-03
WITH HELMETED BICYCLIST
NOT TO SCALE

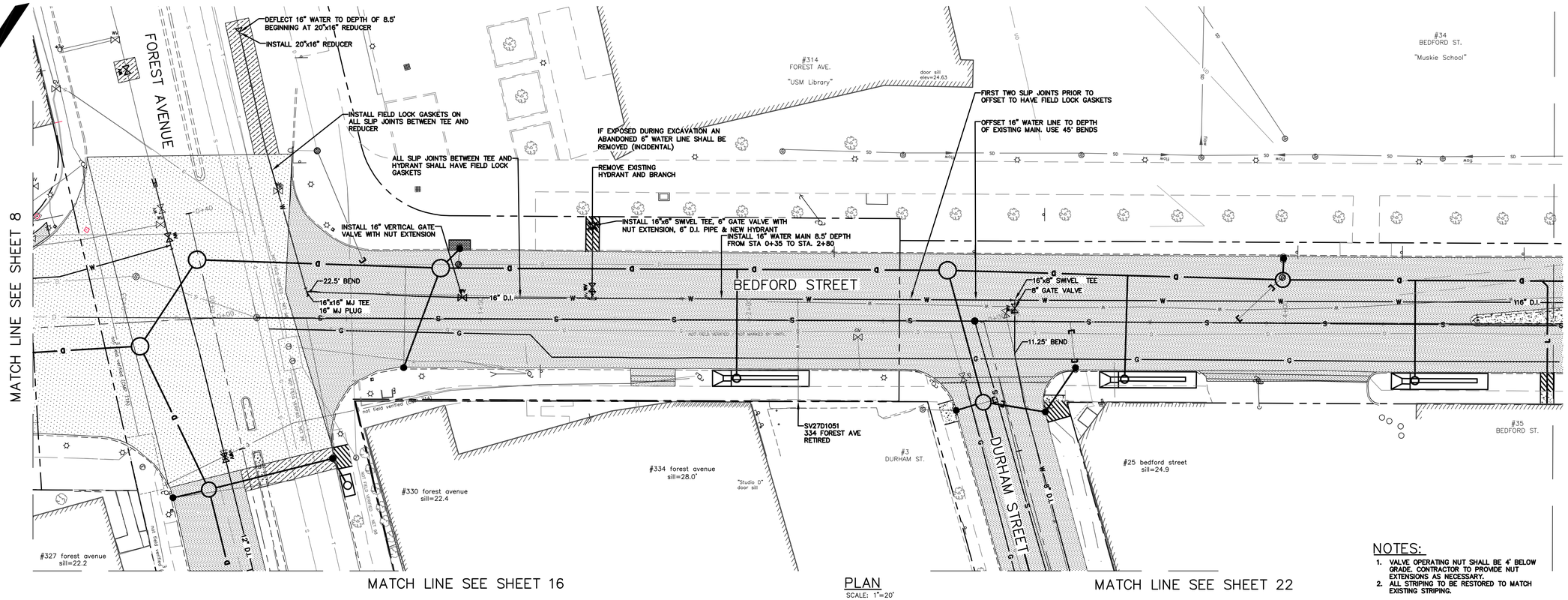


PLAN
SCALE: 1"=20'

| | |
|---|---|
| BOX CUT | |
| TRENCH | |
| OVERLAY | |
| RIPRAP | |
| NEW CONCRETE SIDEWALK | |
| COBBLE STONE GUTTER | |
| BIT. SIDEWALK REPAIR | |
| LOAM & SEED | |
| SOLID YELLOW LINE | SYL |
| DASHED WHITE LINE | DWL |
| SOLID WHITE LINE | SWL |

NOTES:

1. VALVE OPERATING NUT SHALL BE 4' BELOW GRADE. CONTRACTOR TO PROVIDE NUT EXTENSIONS AS NECESSARY.
2. ALL STRIPING TO BE RESTORED TO MATCH EXISTING STRIPING.

FEBRUARY 2018

Civil 3D 2013 Drawing Name:
17112 PP BEDFORD STREET.dwg, TAB:BEDFORD STREET L01

CITY PROPERTY PLAN BOOK SHEETS:
I & I SHEETS: II-9, III-II

02/23/18 RAM ISSUE ADDENDUM #1

REFERENCES:

| | |
|---|---|
| DESIGN BY: | BLM |
| DRAWN BY: | SAP |
| CHECKED BY: | RAM |
| SCALE: | 1"=20' |
| DATE: | 02.16.2018 |

STATE OF MAINE
ROBERT A. MCCARTHY
No. 8589
PROFESSIONAL ENGINEER
02.23.2018

BEDFORD STREET
SEWER SEPERATION PROJECT

BEDFORD STREET LAYOUT & WATER PLAN

CITY OF PORTLAND, MAINE
PUBLIC WORKS DEPARTMENT
WATER RESOURCES DIVISION

SHEET #
10 OF 46

PLAN NUMBER

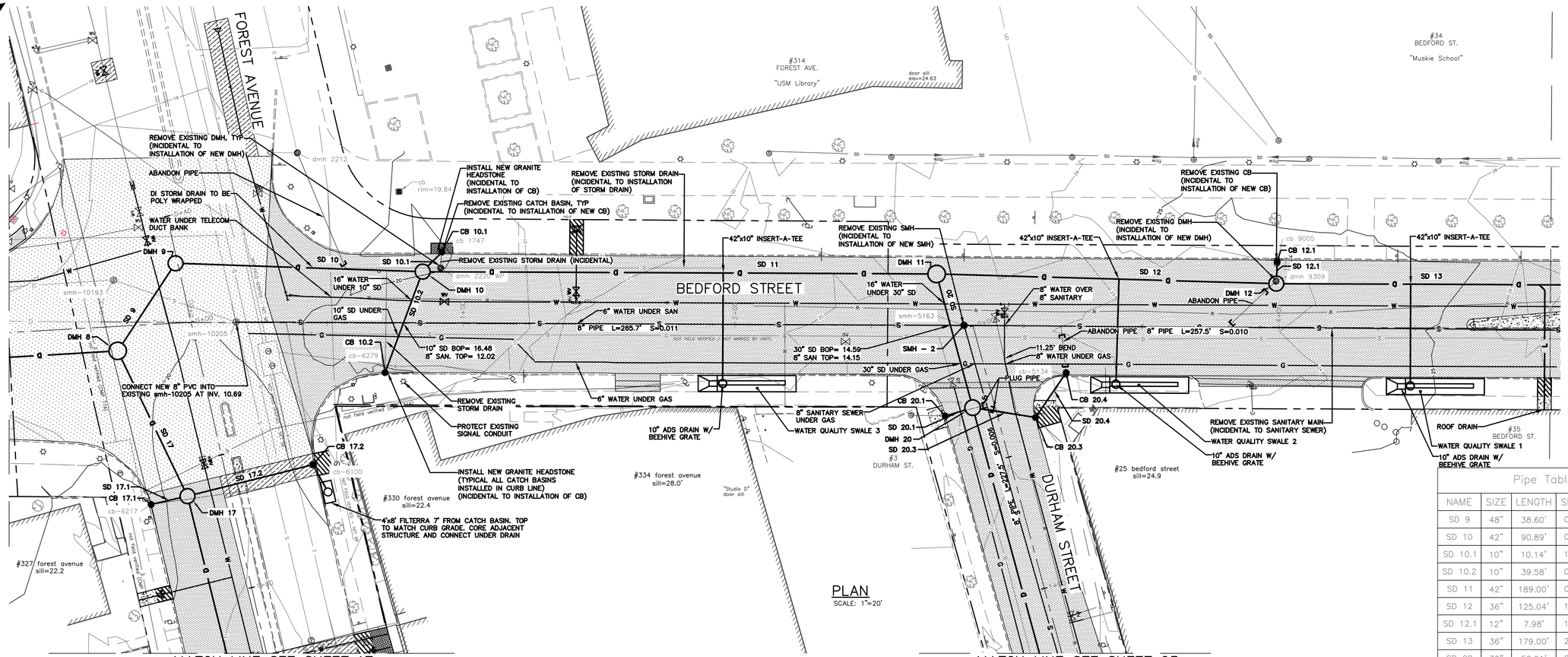


## NOTES:

1. ABANDON PIPE SHALL MEAN CUT PIPE, PLUG BOTH ENDS, AND FILL WITH FLOWABLE FILL.
2. PLUG PIPE SHALL MEAN INSTALL MASONRY PLUG OR PVC CAP.

## PWD NOTE:

NEW WATER MAIN TO BE SET AT EXISTING MAIN ELEVATION.

NOTE: THAT CONTRACTOR MAY ENCOUNTER REMNANT PORTLAND RAIL COMPANY RAILROAD TRACKS TO THE EAST OF THE CENTER LINE OF FOREST AVENUE.

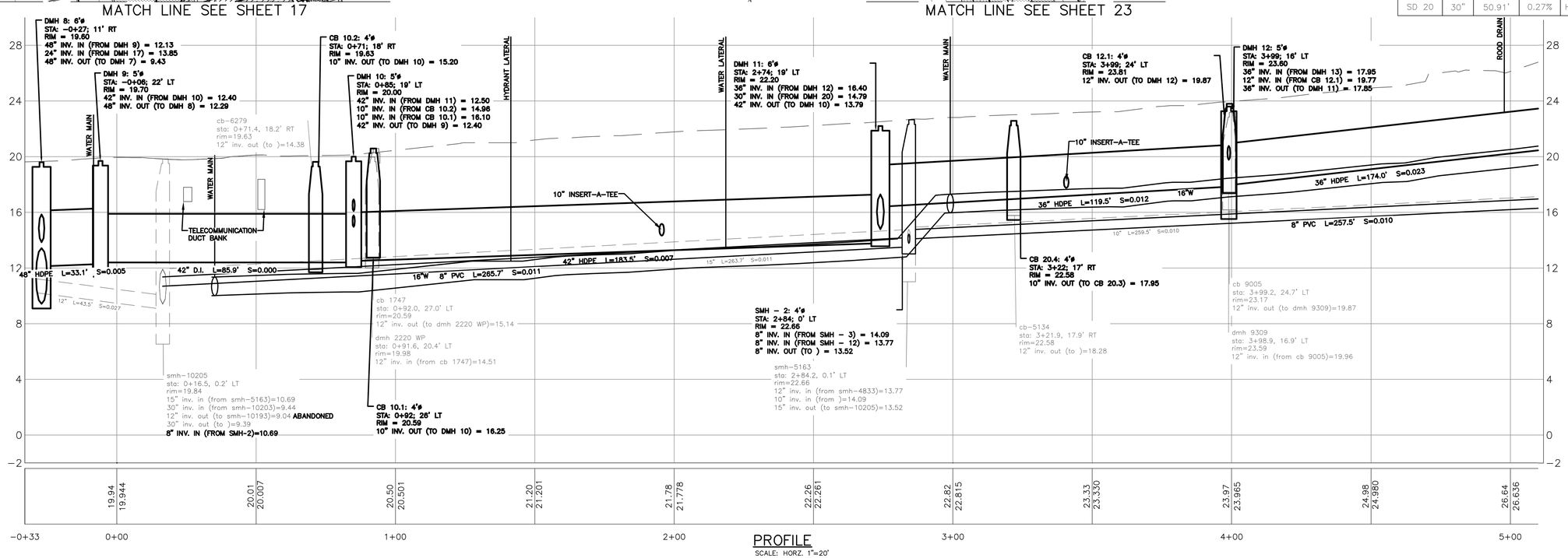


## Pipe Table

| NAME | SIZE | LENGTH | SLOPE | MATERIAL |
|---|---|---|---|---|
| SD 9 | 48" | 38.60' | 0.41% | HDPE |
| SD 10 | 42" | 90.89' | 0.00% | D.I. |
| SD 10.1 | 10" | 10.14' | 1.48% | HDPE |
| SD 10.2 | 10" | 39.58' | 0.61% | HDPE |
| SD 11 | 42" | 189.00' | 0.68% | HDPE |
| SD 12 | 36" | 125.04' | 1.16% | HDPE |
| SD 12.1 | 12" | 7.98' | 1.25% | HDPE |
| SD 13 | 36" | 179.00' | 2.26% | HDPE |
| SD 20 | 30" | 50.91' | 0.27% | HDPE |

FEBRUARY 2018

Civil 3D 2013 Drawing Name:
17112 PP BEDFORD STREET.dwg, TAB:BEDFORD STREET PP1

CITY PROPERTY PLAN BOOK SHEETS:
I & I SHEETS: III-9, III-11

REFERENCES:

DESIGN BY: RLM
DRAWN BY: SAP
CHECKED BY: RAM
SCALE: 1" = 20'
DATE: 02.16.2018

STATE OF MAINE ROBERT A. MCDERMOTT No. 8589 LICENSED PROFESSIONAL ENGINEER

# BEDFORD STREET SEWER SEPERATION PROJECT

PLAN & PROFILE - BEDFORD STREET
STA. 0+00 TO STA. 5+00

CITY OF PORTLAND, MAINE
PUBLIC WORKS DEPARTMENT
WATER RESOURCES DIVISION

CITY OF PORTLAND, MAINE — RESURGAM

SHEET # 11 OF 46

PLAN NUMBER

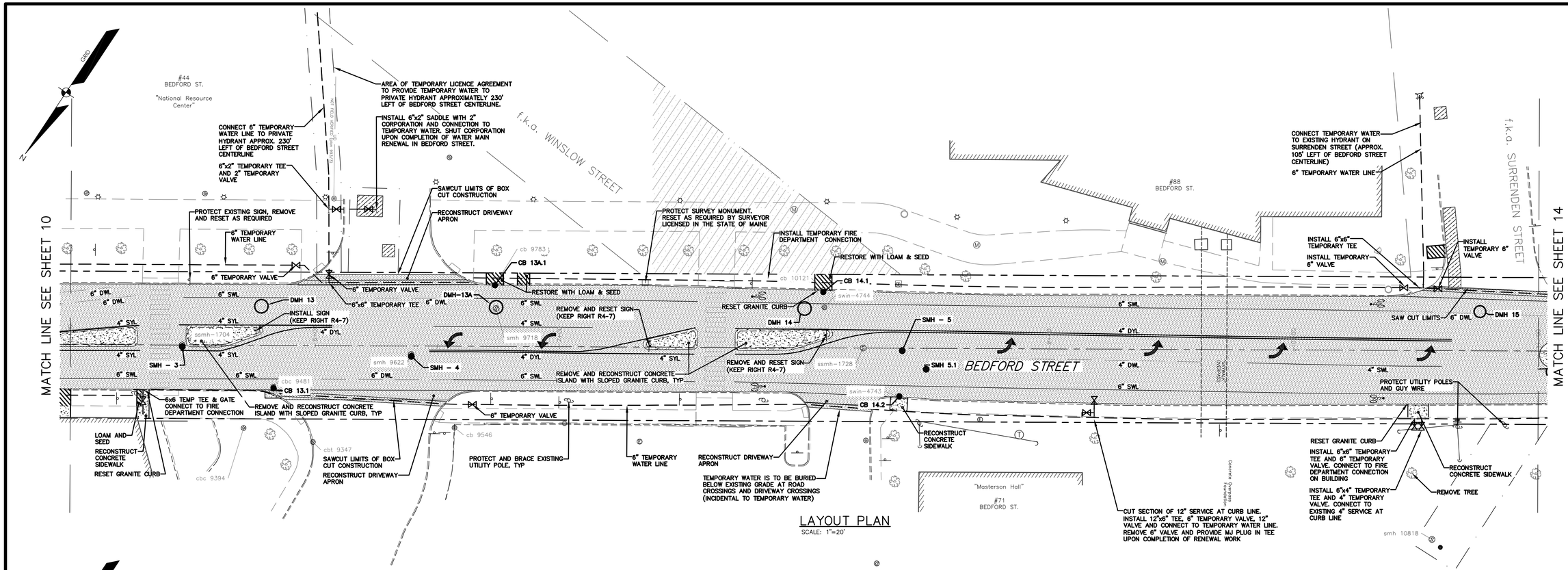


LAYOUT PLAN
SCALE: 1"=20'

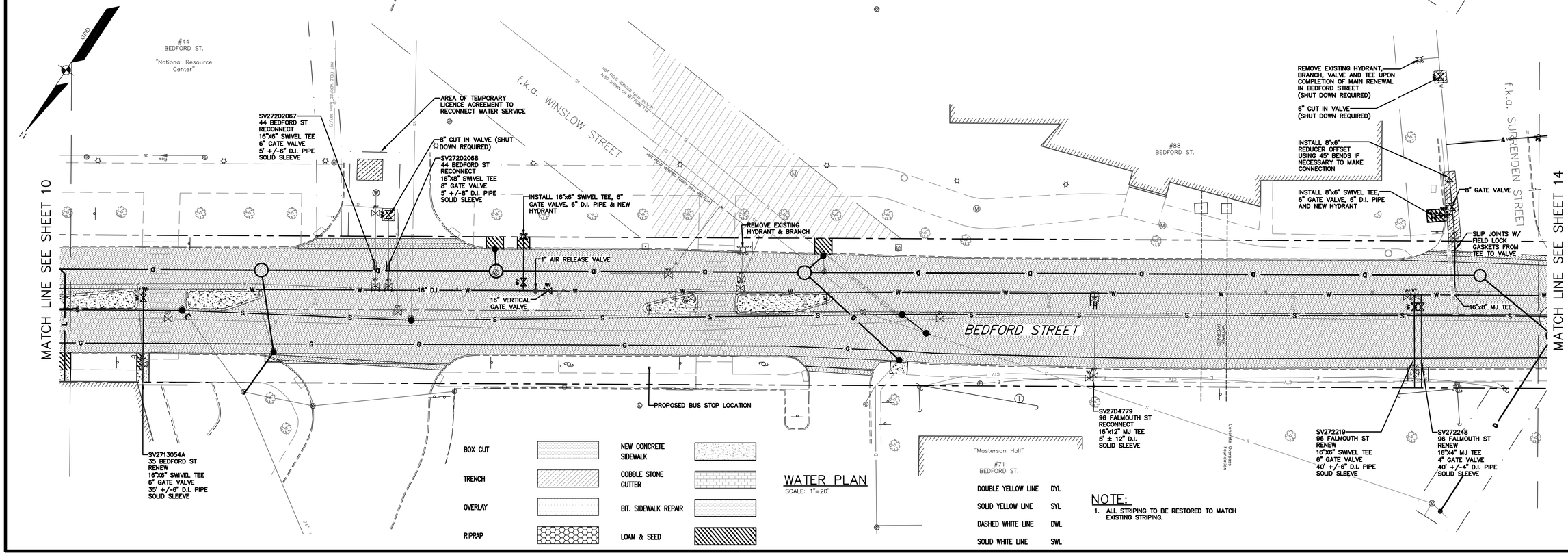


WATER PLAN
SCALE: 1"=20'

| | | | |
|---|---|---|---|
| BOX CUT | | NEW CONCRETE SIDEWALK | |
| TRENCH | | COBBLE STONE GUTTER | |
| OVERLAY | | BIT. SIDEWALK REPAIR | |
| RIPRAP | | LOAM & SEED | |

| | |
|---|---|
| DOUBLE YELLOW LINE | DYL |
| SOLID YELLOW LINE | SYL |
| DASHED WHITE LINE | DWL |
| SOLID WHITE LINE | SWL |

NOTE:
1. ALL STRIPING TO BE RESTORED TO MATCH EXISTING STRIPING.

FEBRUARY 2018

Civil 3D 2013 Drawing Name: 17112 PP BEDFORD STREET.dwg, TAB:BEDFORD STREET LO2

CITY PROPERTY PLAN BOOK SHEETS: I & I SHEETS: III-9, III-11

02/23/18 RAM ISSUE ADDENDUM #1

REFERENCES:

| | |
|---|---|
| DESIGN BY: | RLM |
| DRAWN BY: | SAP |
| CHECKED BY: | RAM |
| SCALE: | 1" = 20' |
| DATE: | 02. 16. 2018 |
| DATE: | 02. 23. 2018 |

STATE OF MAINE ROBERT A. McSORLEY No. 4568 LICENSED PROFESSIONAL ENGINEER

BEDFORD STREET SEWER SEPERATION PROJECT

BEDFORD STREET LAYOUT & WATER PLAN

CITY OF PORTLAND, MAINE
PUBLIC WORKS DEPARTMENT
WATER RESOURCES DIVISION

RESURGAM CITY OF PORTLAND, MAINE

SHEET # 12 OF 46

PLAN NUMBER

NOTES:

1. ABANDON PIPE SHALL MEAN CUT PIPE, PLUG BOTH ENDS, AND FILL WITH FLOWABLE FILL.
2. PLUG PIPE SHALL MEAN INSTALL MASONRY PLUG OR PVC CAP.

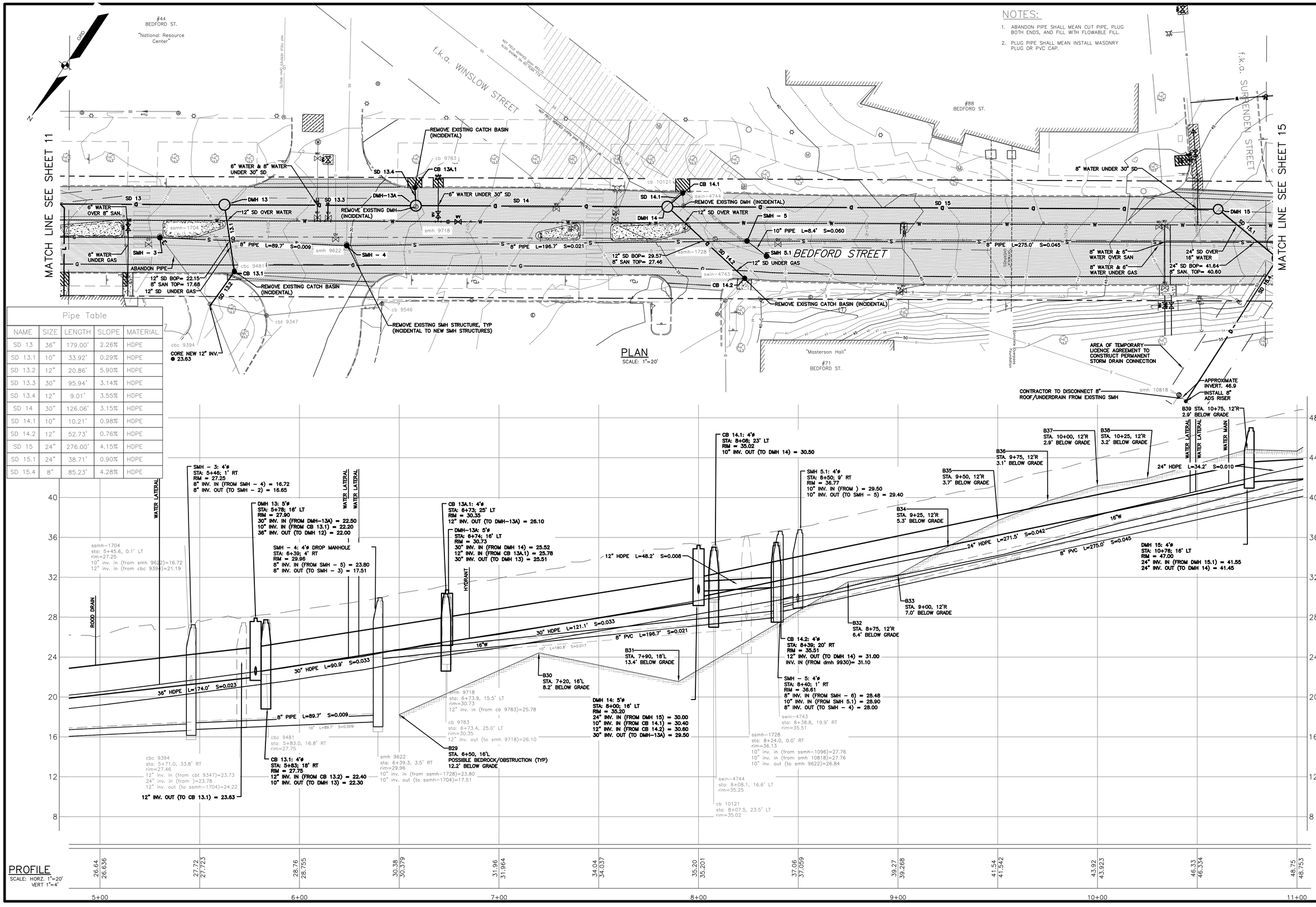


REFERENCES:

Civil 3D 2013 Drawing Name: 17112 PP BEDFORD STREET.dwg, TAB:BEDFORD STREET PP2

CITY PROPERTY PLAN BOOK SHEETS: I & I SHEETS: II-9, II-11

FEBRUARY 2018

DESIGN BY: RLM
DRAWN BY: SAP
CHECKED BY: RAM
SCALE: 1" = 20'
DATE: 02.16.2018

STATE OF MAINE ROBERT A. McSORLEY No. 8569 LICENSED PROFESSIONAL ENGINEER

BEDFORD STREET SEWER SEPERATION PROJECT

PLAN & PROFILE - BEDFORD STREET STA. 5+00 TO STA. 11+00

CITY OF PORTLAND, MAINE
PUBLIC WORKS DEPARTMENT
WATER RESOURCES DIVISION

CITY OF PORTLAND, MAINE

SHEET # 13 OF 46

PLAN NUMBER

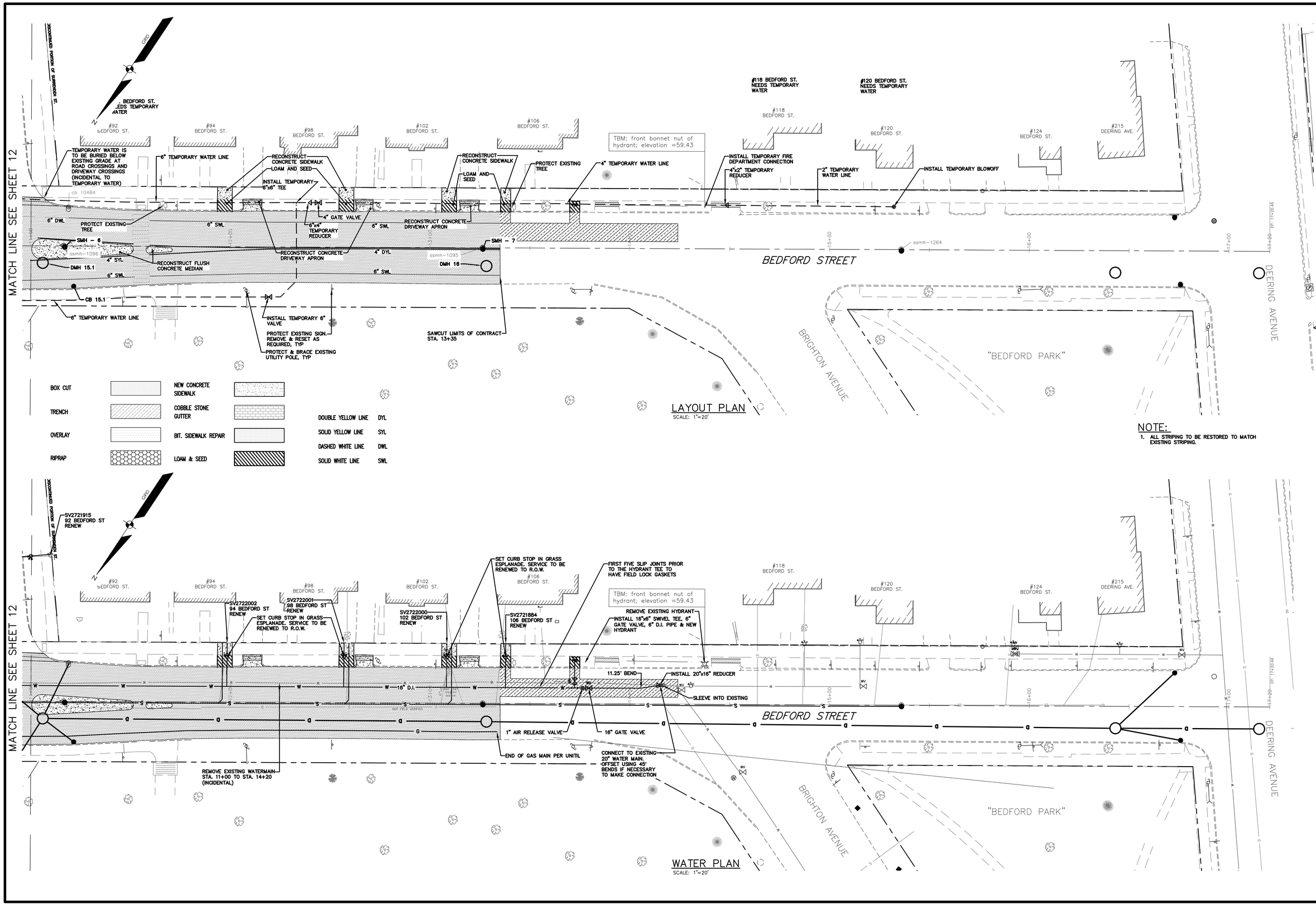


02/23/18 B&M ISSUE ADDENDUM #1

REFERENCES:

Civil 3D 2013 Drawing Name:
17112 PP BEDFORD STREET.dwg, TAB:BEDFORD STREET L03

CITY PROPERTY PLAN BOOK SHEETS:
I & J SHEETS: III-9, III-11

FEBRUARY 2018

DESIGN BY: BLM
DRAWN BY: MP
CHECKED BY: BMB
SCALE: 1" = 20'
DATE: 02.16.2018

STATE OF MAINE
ROBERT B. MASTERSON
LICENSED
PROFESSIONAL ENGINEER
No. 8568
02.23.2018

BEDFORD STREET
SEWER SEPERATION PROJECT

BEDFORD STREET LAYOUT & WATER PLAN

CITY OF PORTLAND, MAINE
PUBLIC WORKS DEPARTMENT
WATER RESOURCES DIVISION

SHEET #
14 OF 46

PLAN NUMBER

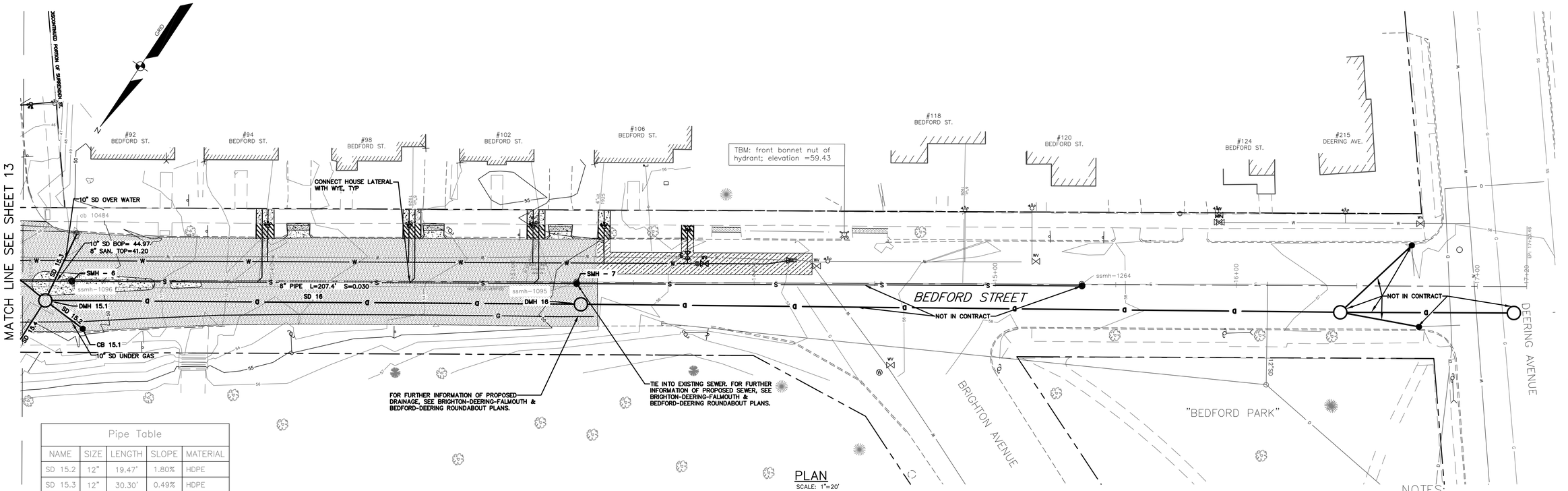


PLAN
SCALE: 1"=20'

| Pipe Table | | | | |
|---|---|---|---|---|
| NAME | SIZE | LENGTH | SLOPE | MATERIAL |
| SD 15.2 | 12" | 19.47' | 1.80% | HDPE |
| SD 15.3 | 12" | 30.30' | 0.49% | HDPE |
| SD 15.4 | 8" | 85.23' | 4.28% | HDPE |
| SD 16 | 24" | 222.20' | 1.96% | HDPE |

NOTES:

1. ABANDON PIPE SHALL MEAN CUT PIPE, PLUG BOTH ENDS, AND FILL WITH FLOWABLE FILL.
2. PLUG PIPE SHALL MEAN INSTALL MASONRY PLUG OR PVC CAP.

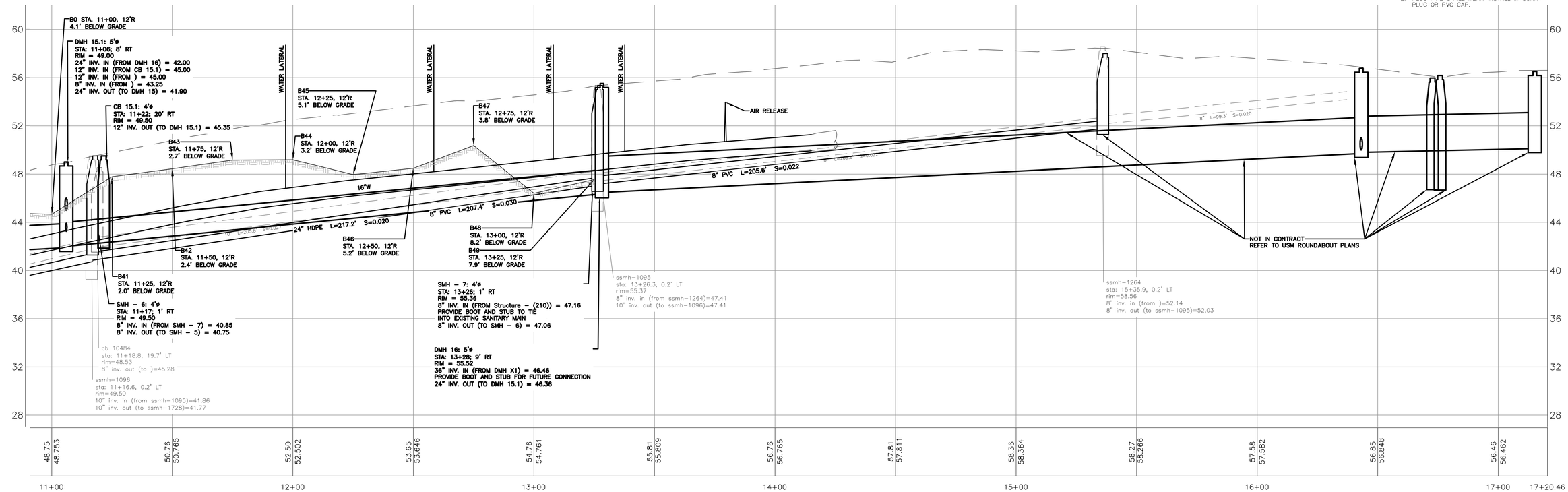


PROFILE
SCALE: HORZ. 1"=20'
VERT 1"=4'

Civil 3D 2013 Drawing Name:
17112 PP BEDFORD STREET.dwg, TAB:BEDFORD STREET PP3

CITY PROPERTY PLAN BOOK SHEETS:
I & I SHEETS: III-9, III-H

FEBRUARY 2018

03/07/18 RAM ISSUE ADDENDUM #2

REFERENCES:

| | |
|---|---|
| DESIGN BY: | RLM |
| DRAWN BY: | SAP |
| CHECKED BY: | RAM |
| SCALE: | 1" = 20' |
| DATE: | 02. 16. 2018 |
| | 03. 07. 2018 |

STATE OF MAINE
ROBERT A. MCSORLEY
No. 4556
LICENSED
PROFESSIONAL ENGINEER

BEDFORD STREET
SEWER SEPERATION PROJECT

PLAN & PROFILE - BEDFORD STREET
STA. 11+00 TO STA. 17+12.46

CITY OF PORTLAND, MAINE
PUBLIC WORKS DEPARTMENT
WATER RESOURCES DIVISION

RESURGAM CITY OF PORTLAND, MAINE

SHEET #
15 OF 46

PLAN NUMBER

NOTE:
1. CONTRACTOR SHOULD EXPECT TO ENCOUNTER COBBLESTONES UNDERLAIN BY AN APPROXIMATELY 6"THICK CONCRETE FOUNDATION WITHIN THE CONSTRICTION LIMITS OF FOREST AVENUE.
2. LIMITS OF CONSTRUCTION WITH FOREST AVENUE MAY INCLUDE THE REMOVAL OF BURIED RAIL LINES. CONTRACTOR SHALL REMOVE LINES AND TIES WITHIN THE LIMITS OF CONSTRUCTION AND DISPOSE OF PER THE CONTRACT DOCUMENTS. ANY TIES THAT EXTEND PAST THE TRENCH LIMITS SHALL BE CUT PLUMB AT THE TRENCH LIMITS AND REMOVE WITHIN THE TRENCH.
3. TRENCH WORK WITHIN FOREST AVENUE, OUTSIDE OF THE ROAD REBUILD LIMITS, THAT ENCOUNTER COBBLESTONE/CONCRETE SHALL INSTALL 12" OF CONCRETE IN TRENCH BELOW THE PAVEMENT INSTALLATION.
4. ALL STRIPING TO BE RESTORED TO MATCH EXISTING STRIPING.

| | |
|---|---|
| BOX CUT | |
| TRENCH | |
| OVERLAY | |
| RIPRAP | |
| NEW CONCRETE SIDEWALK | |
| COBBLE STONE GUTTER | |
| BIT. SIDEWALK REPAIR | |
| LOAM & SEED | |
| DOUBLE YELLOW LINE | DYL |
| SOLID YELLOW LINE | SYL |
| DASHED WHITE LINE | DWL |
| SOLID WHITE LINE | SWL |

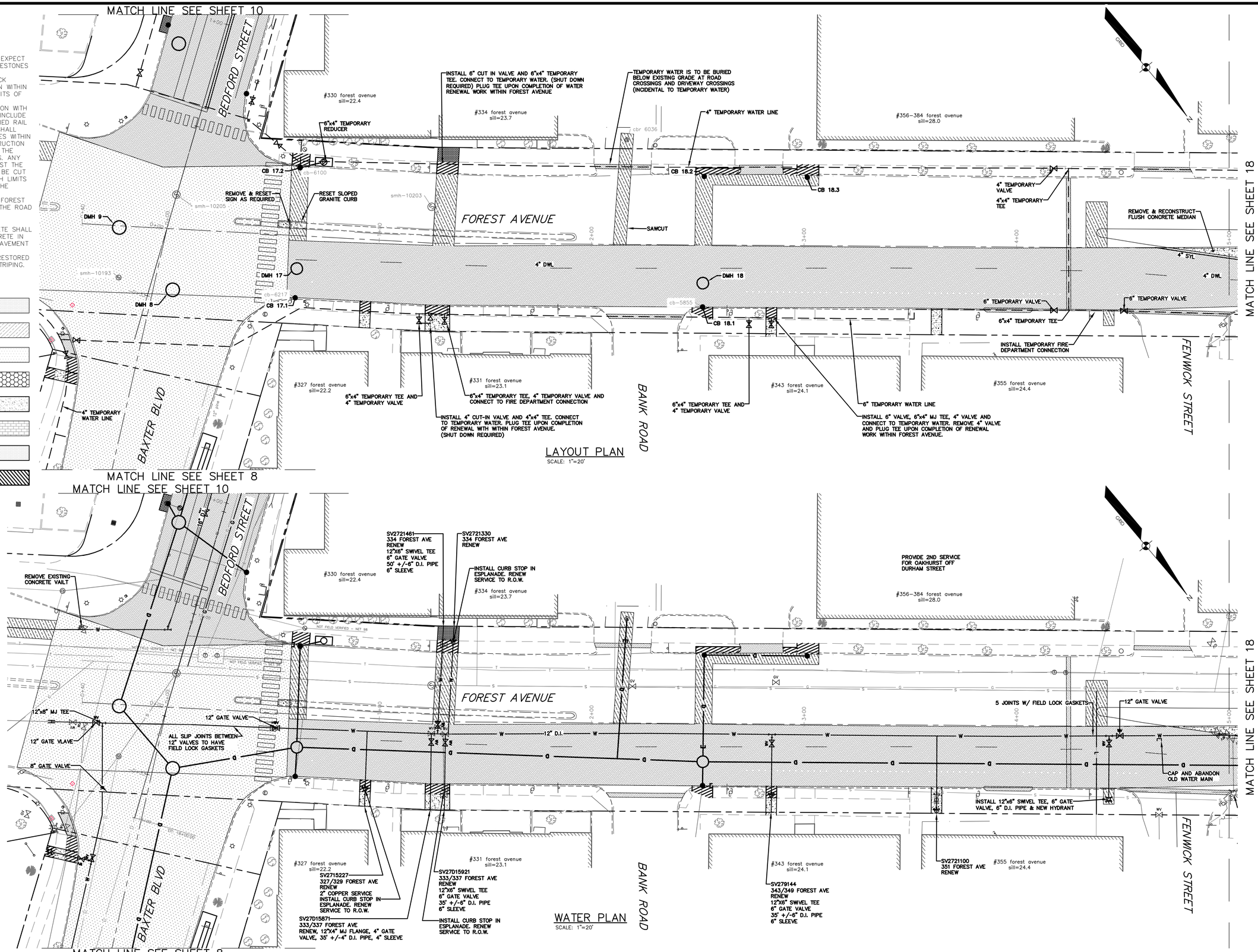


LAYOUT PLAN
SCALE: 1"=20'

WATER PLAN
SCALE: 1"=20'

02/23/18 RAM ISSUE ADDENDUM #1

REFERENCES:

Civil 3D 2013 Drawing Name:
17112 PP FOREST AVE.dwg, TAB:FOREST AVE L01

CITY PROPERTY PLAN BOOK SHEETS:
1 & 3 SHEETS: 1II-9, 1II-11

FEBRUARY 2018

DESIGNED BY: RLM
DRAWN BY: SAP
CHECKED BY: RAM
SCALE: 1" = 20'
DATE: 02.16.2018

STATE OF MAINE ROBERT A. MCDONALD No. 8058 LICENSED PROFESSIONAL ENGINEER
02.23.2018

# BEDFORD STREET SEWER SEPERATION PROJECT

FOREST AVENUE LAYOUT & WATER PLAN

CITY OF PORTLAND, MAINE
PUBLIC WORKS DEPARTMENT
WATER RESOURCES DIVISION

RESURGAM CITY OF PORTLAND, MAINE

SHEET # 16 OF 46

PLAN NUMBER

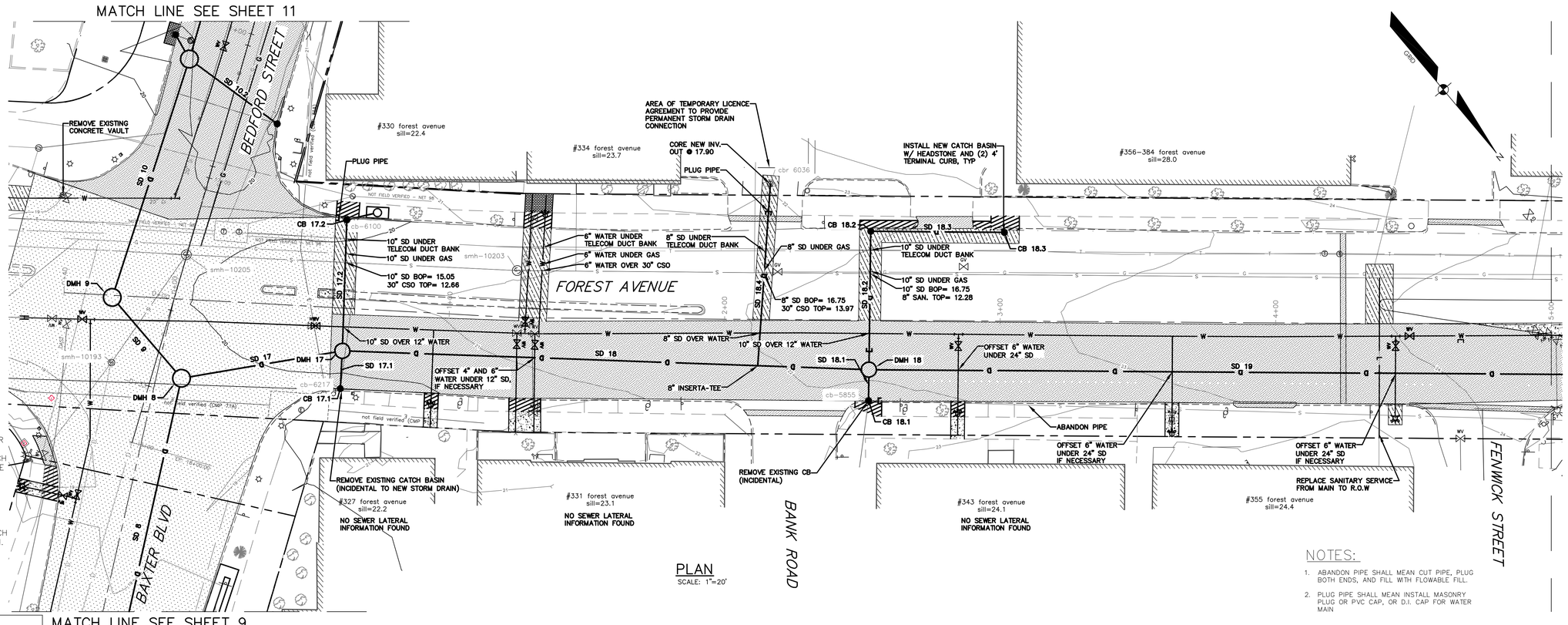


NOTE:
1. CONTRACTOR SHOULD EXPECT TO ENCOUNTER COBBLESTONES UNDERLAIN BY AN APPROXIMATELY 6"THICK CONCRETE FOUNDATION WITHIN THE CONSTRICTION LIMITS OF FOREST AVENUE.
2. LIMITS OF CONSTRUCTION WITH FOREST AVENUE MAY INCLUDE THE REMOVAL OF BURIED RAIL LINES. CONTRACTOR SHALL REMOVE LINES AND TIES WITHIN THE LIMITS OF CONSTRUCTION AND DISPOSE OF PER THE CONTRACT DOCUMENTS. ANY TIES THAT EXTEND PAST THE TRENCH LIMITS SHALL BE CUT PLUMB AT THE TRENCH LIMITS AND REMOVE WITHIN THE TRENCH.
3. TRENCH WORK WITHIN FOREST AVENUE, OUTSIDE OF THE ROAD REBUILD LIMITS, THAT ENCOUNTER COBBLESTONE/CONCRETE SHALL INSTALL 12" OF CONCRETE IN TRENCH BELOW THE PAVEMENT INSTALLATION.

PLAN
SCALE: 1"=20'

NOTES:
1. ABANDON PIPE SHALL MEAN CUT PIPE, PLUG BOTH ENDS, AND FILL WITH FLOWABLE FILL.
2. PLUG PIPE SHALL MEAN INSTALL MASONRY PLUG OR PVC CAP, OR D.I. CAP FOR WATER MAIN

Pipe Table

| NAME | SIZE | LENGTH | SLOPE | MATERIAL |
|---|---|---|---|---|
| SD 9 | 48" | 38.60' | 0.41% | HDPE |
| SD 10 | 42" | 90.89' | 0.00% | D.I. |
| SD 17 | 24" | 59.23' | 0.59% | HDPE |
| SD 17.1 | 10" | 13.72' | 2.91% | HDPE |
| SD 17.2 | 10" | 47.53' | 1.05% | HDPE |
| SD 18 | 24" | 191.23' | 0.52% | HDPE |
| SD 18.1 | 10" | 11.21' | 0.00% | HDPE |
| SD 18.2 | 12" | 50.20' | 0.40% | HDPE |
| SD 18.3 | 10" | 48.48' | 0.40% | HDPE |
| SD 18.4 | 8" | 66.12' | 0.20% | HDPE |
| SD 19 | 18" | 270.53' | 0.92% | HDPE |

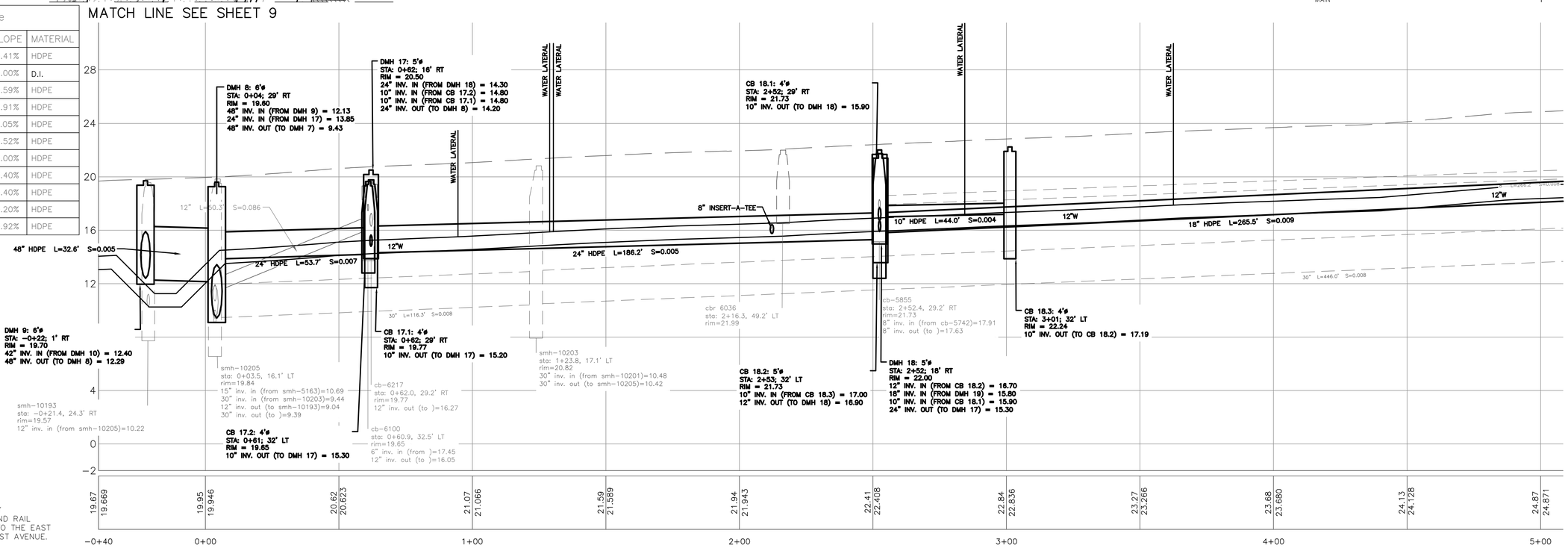


NOTE: THAT CONTRACTOR MAY ENCOUNTER REMNANT PORTLAND RAIL COMPANY RAILROAD TRACKS TO THE EAST OF THE CENTER LINE OF FOREST AVENUE.

PROFILE
SCALE: HORZ. 1"=20'
VERT 1"=4'

FEBRUARY 2018

02/23/18 RAM ISSUE ADDENDUM #1

REFERENCES:

Civil 3D 2013 Drawing Name:
17112 PP FOREST AVE.dwg, TAB:FOREST AVE PP1

CITY PROPERTY PLAN BOOK SHEETS:
I & J SHEETS: III-9, III-11

DESIGN BY: RLM
DRAWN BY: SAP
CHECKED BY: RAM
SCALE: 1" = 20'
DATE: 02. 16. 2018
02. 23. 2018

STATE OF MAINE ROBERT McSORLEY 3456 LICENSED PROFESSIONAL ENGINEER

BEDFORD STREET
SEWER SEPERATION PROJECT
PLAN & PROFILE - FOREST AVENUE
STA. 0+00 TO STA. 5+00

CITY OF PORTLAND, MAINE
PUBLIC WORKS DEPARTMENT
WATER RESOURCES DIVISION

RESURGAM CITY OF PORTLAND, MAINE

SHEET #
17 OF 46

PLAN NUMBER

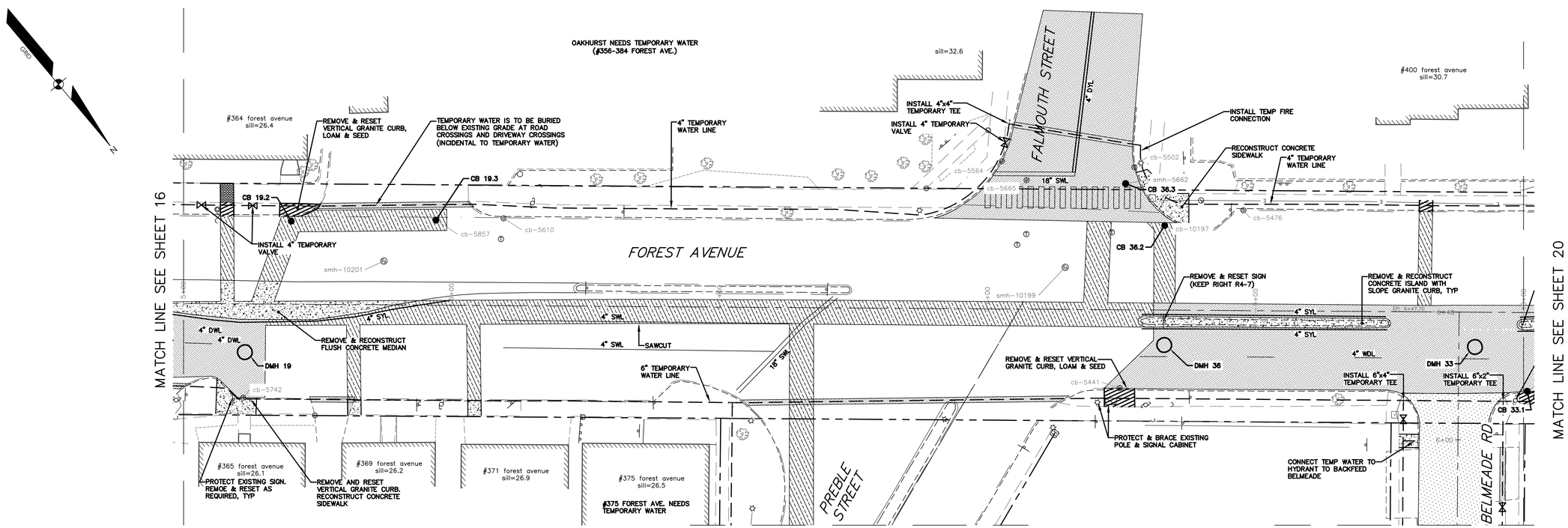


LAYOUT PLAN

SCALE: 1"=20'

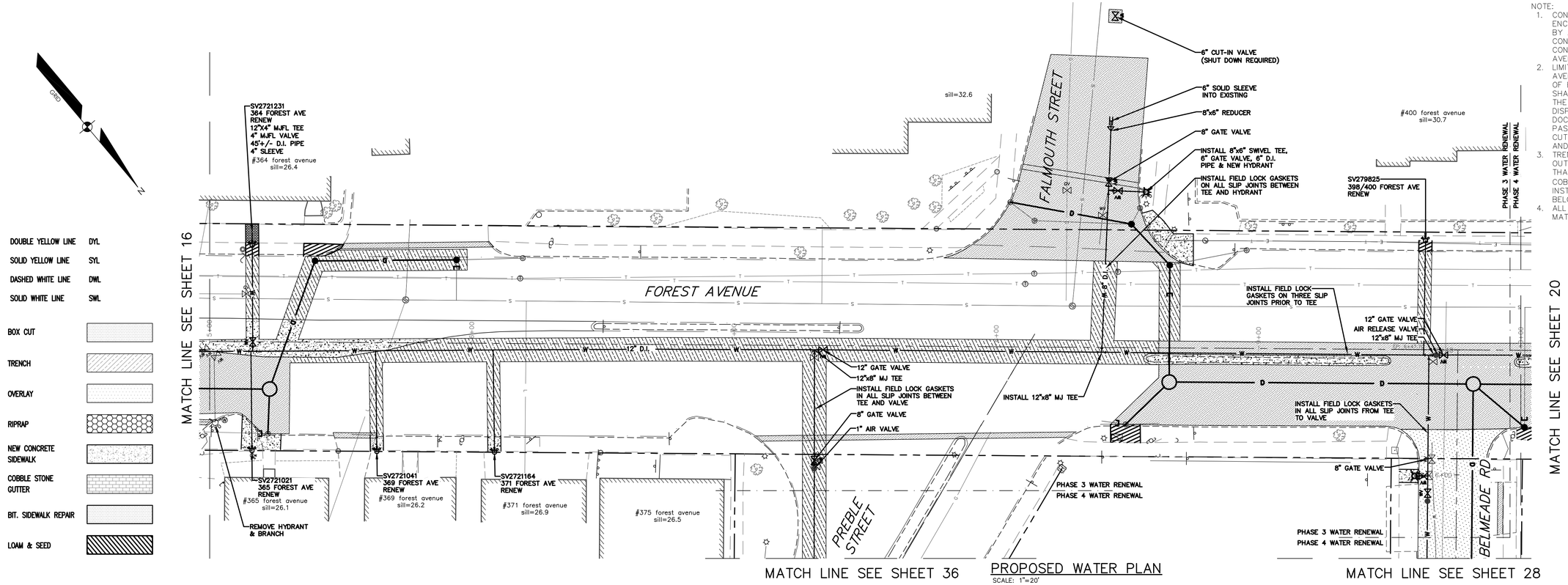


PROPOSED WATER PLAN

SCALE: 1"=20'

NOTE:
1. CONTRACTOR SHOULD EXPECT TO ENCOUNTER COBBLESTONES UNDERLAIN BY AN APPROXIMATELY 6"THICK CONCRETE FOUNDATION WITHIN THE CONSTRICTION LIMITS OF FOREST AVENUE.
2. LIMITS OF CONSTRUCTION WITH FOREST AVENUE MAY INCLUDE THE REMOVAL OF BURIED RAIL LINES. CONTRACTOR SHALL REMOVE LINES AND TIES WITHIN THE LIMITS OF CONSTRUCTION AND DISPOSE OF PER THE CONTRACT DOCUMENTS. ANY TIES THAT EXTEND PAST THE TRENCH LIMITS SHALL BE CUT PLUMB AT THE TRENCH LIMITS AND REMOVE WITHIN THE TRENCH.
3. TRENCH WORK WITHIN FOREST AVENUE, OUTSIDE OF THE ROAD REBUILD LIMITS, THAT ENCOUNTER COBBLESTONE/CONCRETE SHALL INSTALL 12" OF CONCRETE IN TRENCH BELOW THE PAVEMENT INSTALLATION.
4. ALL STRIPING TO BE RESTORED TO MATCH EXISTING STRIPING.

| | |
|---|---|
| DOUBLE YELLOW LINE | DYL |
| SOLID YELLOW LINE | SYL |
| DASHED WHITE LINE | DWL |
| SOLID WHITE LINE | SWL |
| BOX CUT | |
| TRENCH | |
| OVERLAY | |
| RIPRAP | |
| NEW CONCRETE SIDEWALK | |
| COBBLE STONE GUTTER | |
| BIT. SIDEWALK REPAIR | |
| LOAM & SEED | |

FEBRUARY 2018

△ 02/23/18 RAM ISSUE ADDENDUM #1

REFERENCES:

Civil 3D 2013 Drawing Name: 17112 PP FOREST AVE.dwg, TAB:FOREST AVE L02

CITY PROPERTY PLAN BOOK SHEETS: I & I SHEETS: III-9, III-11

| | |
|---|---|
| DESIGN BY: | RLM |
| DRAWN BY: | SAP |
| CHECKED BY: | RAM |
| SCALE: | 1" = 20' |
| DATE: | 02. 16. 2018 |

STATE OF MAINE ROBERT A. McSORLEY No. 2558 LICENSED PROFESSIONAL ENGINEER

02. 23. 2018

BEDFORD STREET SEWER SEPERATION PROJECT

FOREST AVENUE LAYOUT & WATER PLAN

CITY OF PORTLAND, MAINE
PUBLIC WORKS DEPARTMENT
WATER RESOURCES DIVISION

RESURGAM CITY OF PORTLAND, MAINE

SHEET # 18 OF 46

PLAN NUMBER

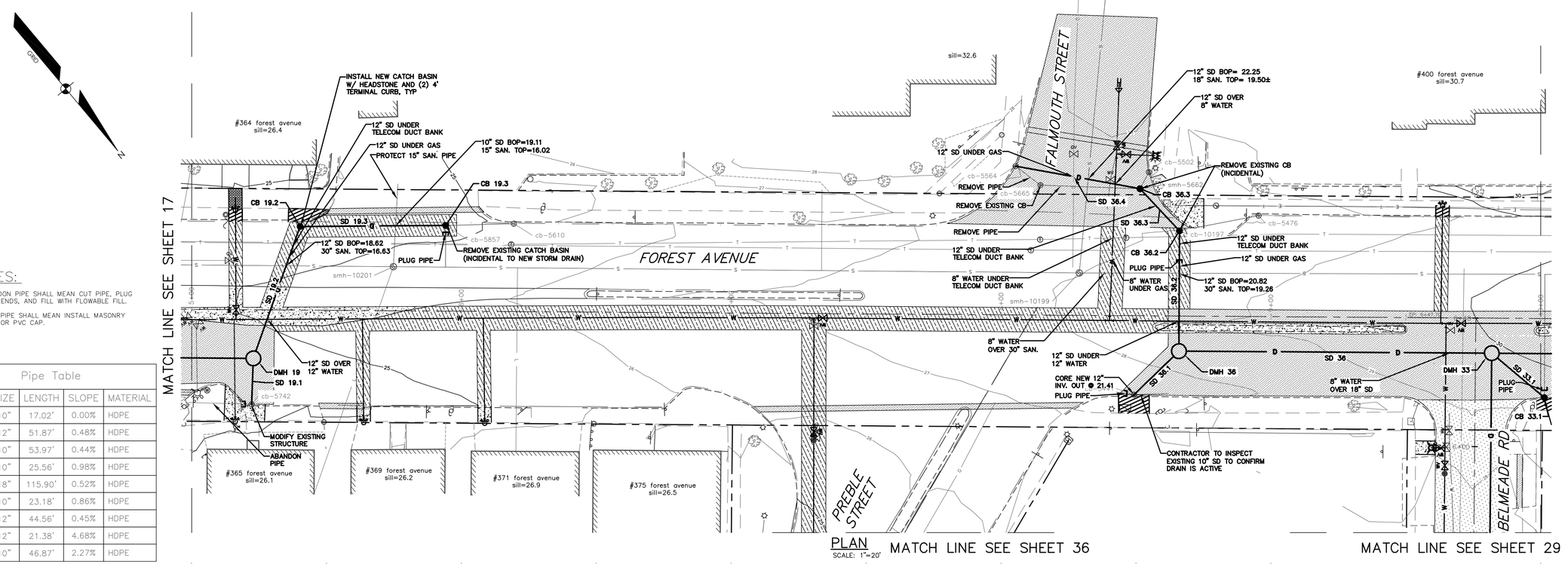


PLAN
SCALE: 1"=20'

MATCH LINE SEE SHEET 36

MATCH LINE SEE SHEET 29

NOTES:

1. ABANDON PIPE SHALL MEAN CUT PIPE, PLUG BOTH ENDS, AND FILL WITH FLOWABLE FILL.
2. PLUG PIPE SHALL MEAN INSTALL MASONRY PLUG OR PVC CAP.

Pipe Table

| NAME | SIZE | LENGTH | SLOPE | MATERIAL |
|---|---|---|---|---|
| SD 19.1 | 10" | 17.02' | 0.00% | HDPE |
| SD 19.2 | 12" | 51.87' | 0.48% | HDPE |
| SD 19.3 | 10" | 53.97' | 0.44% | HDPE |
| SD 33.1 | 10" | 25.56' | 0.98% | HDPE |
| SD 36 | 18" | 115.90' | 0.52% | HDPE |
| SD 36.1 | 10" | 23.18' | 0.86% | HDPE |
| SD 36.2 | 12" | 44.56' | 0.45% | HDPE |
| SD 36.3 | 12" | 21.38' | 4.68% | HDPE |
| SD 36.4 | 10" | 46.87' | 2.27% | HDPE |

NOTE:

1. CONTRACTOR SHOULD EXPECT TO ENCOUNTER COBBLESTONES UNDERLAIN BY AN APPROXIMATELY 6"THICK CONCRETE FOUNDATION WITHIN THE CONSTRICTION LIMITS OF FOREST AVENUE.
2. LIMITS OF CONSTRUCTION WITH FOREST AVENUE MAY INCLUDE THE REMOVAL OF BURIED RAIL LINES. CONTRACTOR SHALL REMOVE LINES AND TIES WITHIN THE LIMITS OF CONSTRUCTION AND DISPOSE OF PER THE CONTRACT DOCUMENTS. ANY TIES THAT EXTEND PAST THE TRENCH LIMITS SHALL BE CUT PLUMB AT THE TRENCH LIMITS AND REMOVE WITHIN THE TRENCH.
3. TRENCH WORK WITHIN FOREST AVENUE, OUTSIDE OF THE ROAD REBUILD LIMITS, THAT ENCOUNTER COBBLESTONE/CONCRETE SHALL INSTALL 12" OF CONCRETE IN TRENCH BELOW THE PAVEMENT INSTALLATION.

NOTE: THAT CONTRACTOR MAY ENCOUNTER REMNANT PORTLAND RAIL COMPANY RAILROAD TRACKS TO THE EAST OF THE CENTER LINE OF FOREST AVENUE.

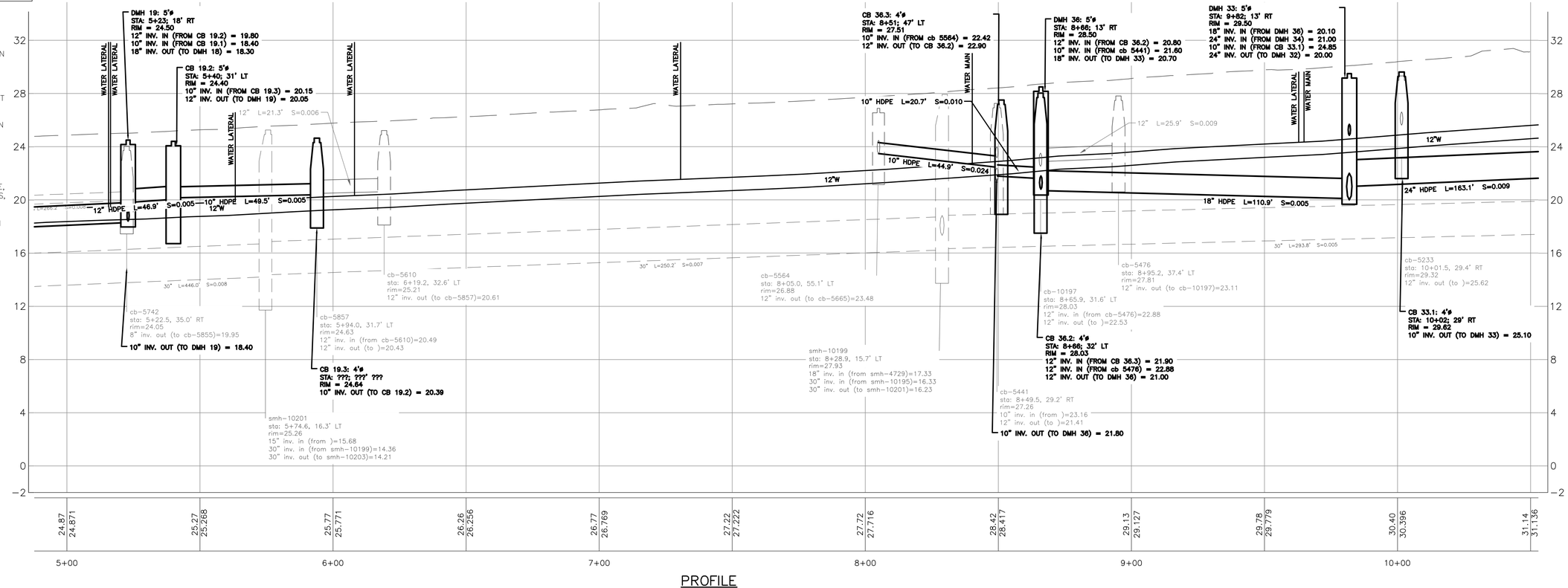


PROFILE
SCALE: HORZ. 1"=20'
VERT 1"=4'

FEBRUARY 2018

Civil 3D 2013 Drawing Name:
17112 PP FOREST AVE.dwg, TAB:FOREST AVE PP2

CITY PROPERTY PLAN BOOK SHEETS:
I & I SHEETS: III-9, III-H

REFERENCES:

| | |
|---|---|
| DESIGN BY: | RLM |
| DRAWN BY: | SAP |
| CHECKED BY: | RAM |
| SCALE: | 1" = 20' |
| DATE: | 02.16.2018 |

STATE OF MAINE ROBERT A. McSPADDEN No. 4256 PROFESSIONAL ENGINEER

BEDFORD STREET
SEWER SEPERATION PROJECT
PLAN & PROFILE - FOREST AVENUE
STA. 5+00 TO STA. 10+00

CITY OF PORTLAND, MAINE
PUBLIC WORKS DEPARTMENT
WATER RESOURCES DIVISION

RESURGAM CITY OF PORTLAND, MAINE

SHEET #
19 OF 46

PLAN NUMBER

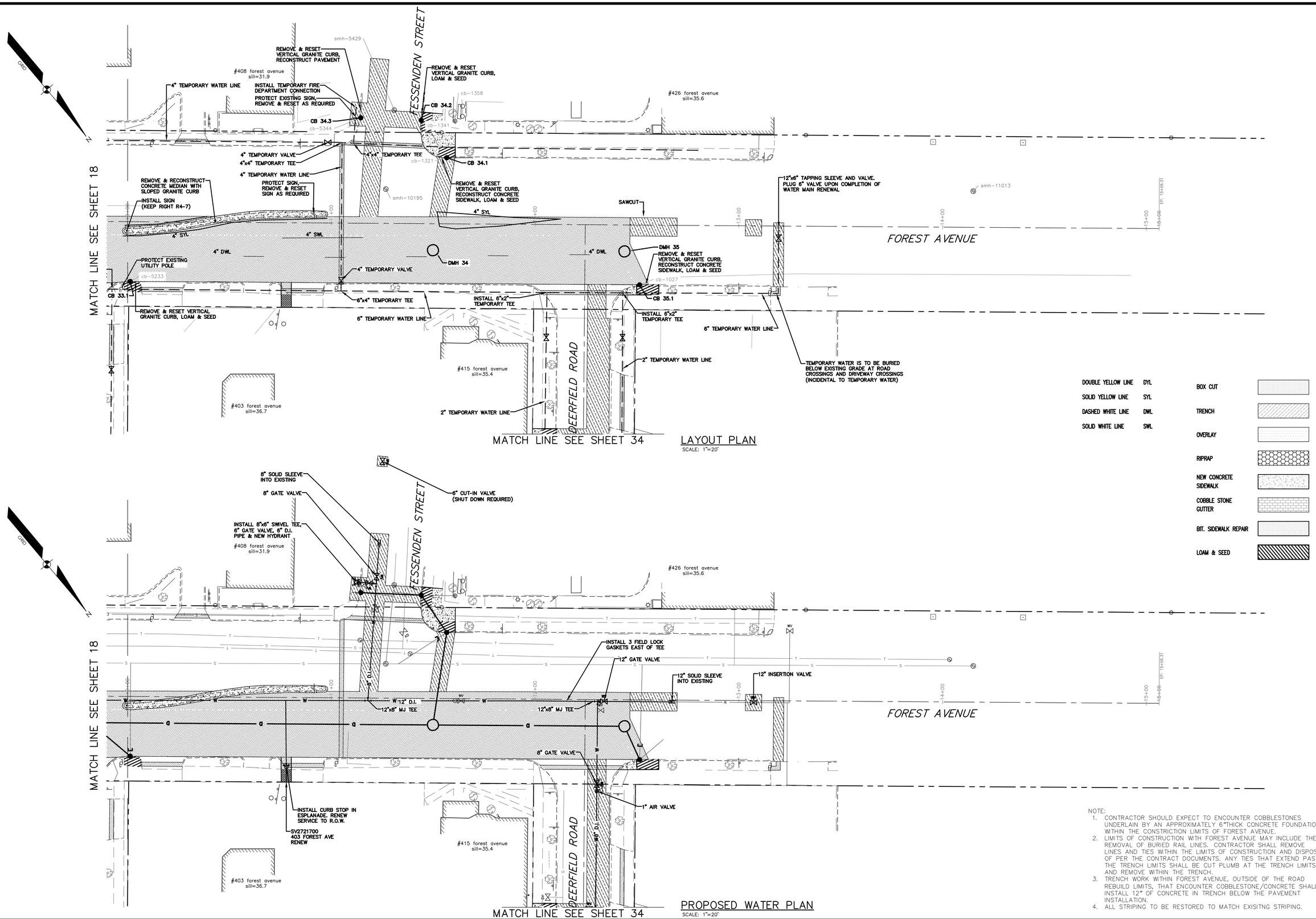


NOTE:

1. CONTRACTOR SHOULD EXPECT TO ENCOUNTER COBBLESTONES UNDERLAIN BY AN APPROXIMATELY 6"THICK CONCRETE FOUNDATION WITHIN THE CONSTRICTION LIMITS OF FOREST AVENUE.
2. LIMITS OF CONSTRUCTION WITH FOREST AVENUE MAY INCLUDE THE REMOVAL OF BURIED RAIL LINES. CONTRACTOR SHALL REMOVE LINES AND TIES WITHIN THE LIMITS OF CONSTRUCTION AND DISPOSE OF PER THE CONTRACT DOCUMENTS. ANY TIES THAT EXTEND PAST THE TRENCH LIMITS SHALL BE CUT PLUMB AT THE TRENCH LIMITS AND REMOVE WITHIN THE TRENCH.
3. TRENCH WORK WITHIN FOREST AVENUE, OUTSIDE OF THE ROAD REBUILD LIMITS, THAT ENCOUNTER COBBLESTONE/CONCRETE SHALL INSTALL 12" OF CONCRETE IN TRENCH BELOW THE PAVEMENT INSTALLATION.
4. ALL STRIPING TO BE RESTORED TO MATCH EXISITNG STRIPING.

02/23/18 RAM ISSUE ADDENDUM #1

REFERENCES:

Civil 3D 2013 Drawing Name:
17112 PP FOREST AVE.dwg, TAB:FOREST AVE LO3

CITY PROPERTY PLAN BOOK SHEETS:
I & I SHEETS: III-9, III-11

FEBRUARY 2018

| | |
|---|---|
| DESIGN BY: | RLM |
| DRAWN BY: | SAP |
| CHECKED BY: | RAM |
| SCALE: | 1" = 20' |
| DATE: | 02. 16. 2018 |

STATE OF MAINE ROBERT A. McSORLEY No. 4556 LICENSED PROFESSIONAL ENGINEER 02. 23. 2018

BEDFORD STREET
SEWER SEPERATION PROJECT

FOREST AVENUE LAYOUT & WATER PLAN

CITY OF PORTLAND, MAINE
PUBLIC WORKS DEPARTMENT
WATER RESOURCES DIVISION

RESURGAM CITY OF PORTLAND, MAINE

SHEET #
20 OF 46

PLAN NUMBER

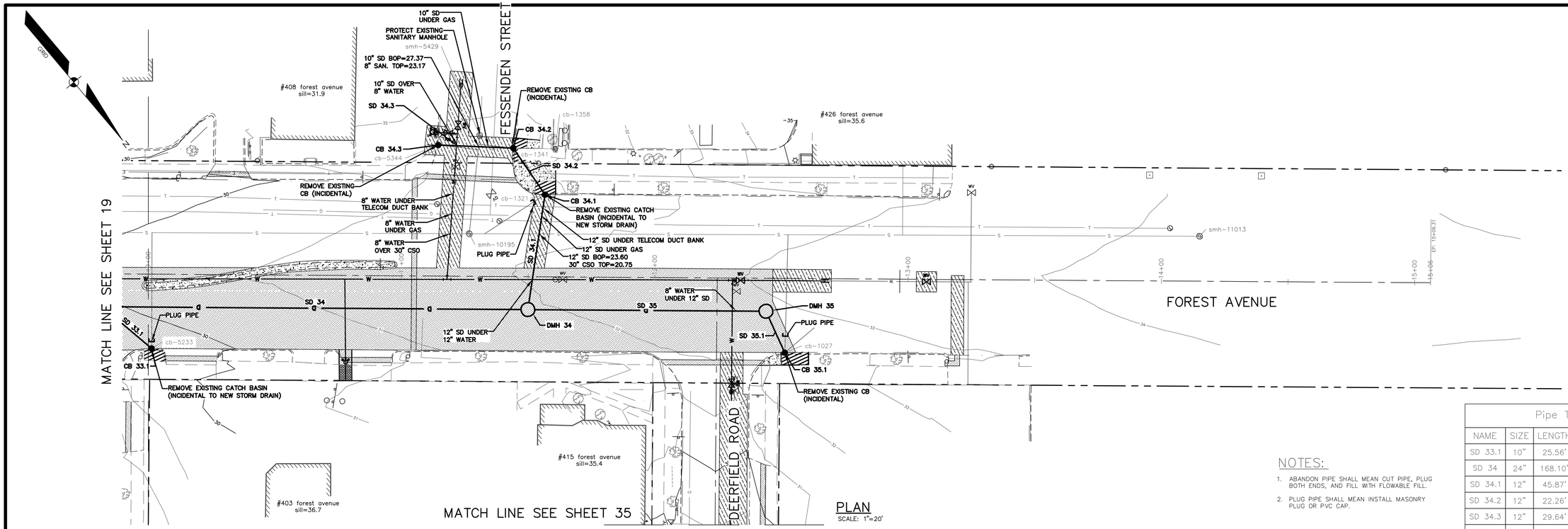


PLAN
SCALE: 1"=20'

NOTES:

1. ABANDON PIPE SHALL MEAN CUT PIPE, PLUG BOTH ENDS, AND FILL WITH FLOWABLE FILL.
2. PLUG PIPE SHALL MEAN INSTALL MASONRY PLUG OR PVC CAP.

Pipe Table

| NAME | SIZE | LENGTH | SLOPE | MATERIAL |
|---|---|---|---|---|
| SD 33.1 | 10" | 25.56' | 0.98% | HDPE |
| SD 34 | 24" | 168.10' | 0.89% | HDPE |
| SD 34.1 | 12" | 45.87' | 0.65% | HDPE |
| SD 34.2 | 12" | 22.26' | 0.00% | HDPE |
| SD 34.3 | 12" | 29.64' | 2.09% | HDPE |
| SD 35 | 12" | 94.00' | 1.91% | HDPE |
| SD 35.1 | 10" | 17.99' | −0.67% | HDPE |

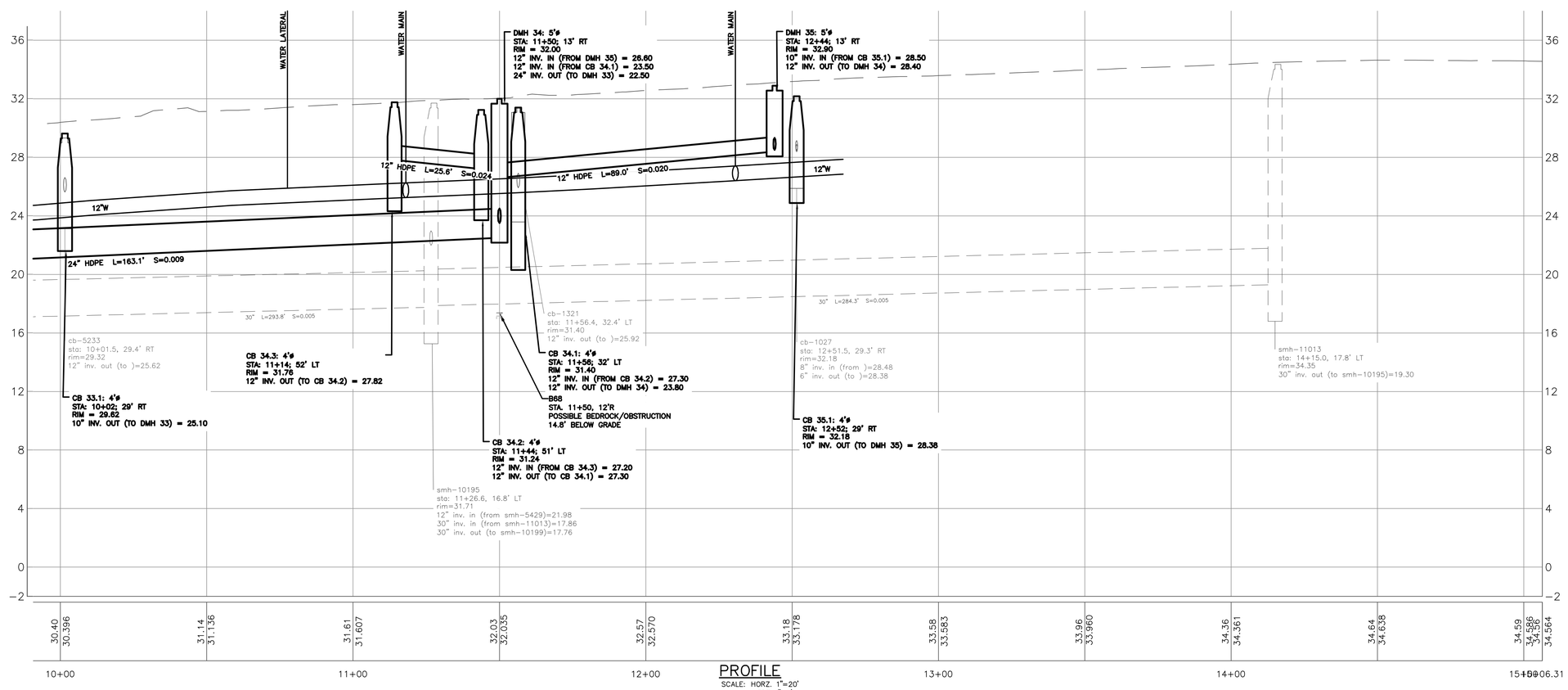


PROFILE
SCALE: HORZ. 1"=20'
VERT 1"=4'

NOTE:

1. CONTRACTOR SHOULD EXPECT TO ENCOUNTER COBBLESTONES UNDERLAIN BY AN APPROXIMATELY 6"THICK CONCRETE FOUNDATION WITHIN THE CONSTRICTION LIMITS OF FOREST AVENUE.
2. LIMITS OF CONSTRUCTION WITH FOREST AVENUE MAY INCLUDE THE REMOVAL OF BURIED RAIL LINES. CONTRACTOR SHALL REMOVE LINES AND TIES WITHIN THE LIMITS OF CONSTRUCTION AND DISPOSE OF PER THE CONTRACT DOCUMENTS. ANY TIES THAT EXTEND PAST THE TRENCH LIMITS SHALL BE CUT PLUMB AT THE TRENCH LIMITS AND REMOVE WITHIN THE TRENCH.
3. TRENCH WORK WITHIN FOREST AVENUE, OUTSIDE OF THE ROAD REBUILD LIMITS, THAT ENCOUNTER COBBLESTONE/CONCRETE SHALL INSTALL 12" OF CONCRETE IN TRENCH BELOW THE PAVEMENT INSTALLATION.

NOTE: THAT CONTRACTOR MAY ENCOUNTER REMNANT PORTLAND RAIL COMPANY RAILROAD TRACKS TO THE EAST OF THE CENTER LINE OF FOREST AVENUE.

FEBRUARY 2018

Civil 3D 2013 Drawing Name:
17112 PP FOREST AVE.dwg, TAB:FOREST AVE PP3

REFERENCES:

CITY PROPERTY PLAN BOOK SHEETS:
I & I SHEETS: III-9, III-11

DESIGN BY: RLM
DRAWN BY: SAP
CHECKED BY: RAM
SCALE: 1" = 20'
DATE: 02.16.2018

STATE OF MAINE
ROBERT A. McSORLEY
No. 2559
LICENSED PROFESSIONAL ENGINEER

BEDFORD STREET
SEWER SEPERATION PROJECT

PLAN & PROFILE - FOREST AVENUE
STA. 10+00 TO STA. 15+00

CITY OF PORTLAND, MAINE
PUBLIC WORKS DEPARTMENT
WATER RESOURCES DIVISION

RESURGAM CITY OF PORTLAND, MAINE

SHEET #
21 OF 46

PLAN NUMBER

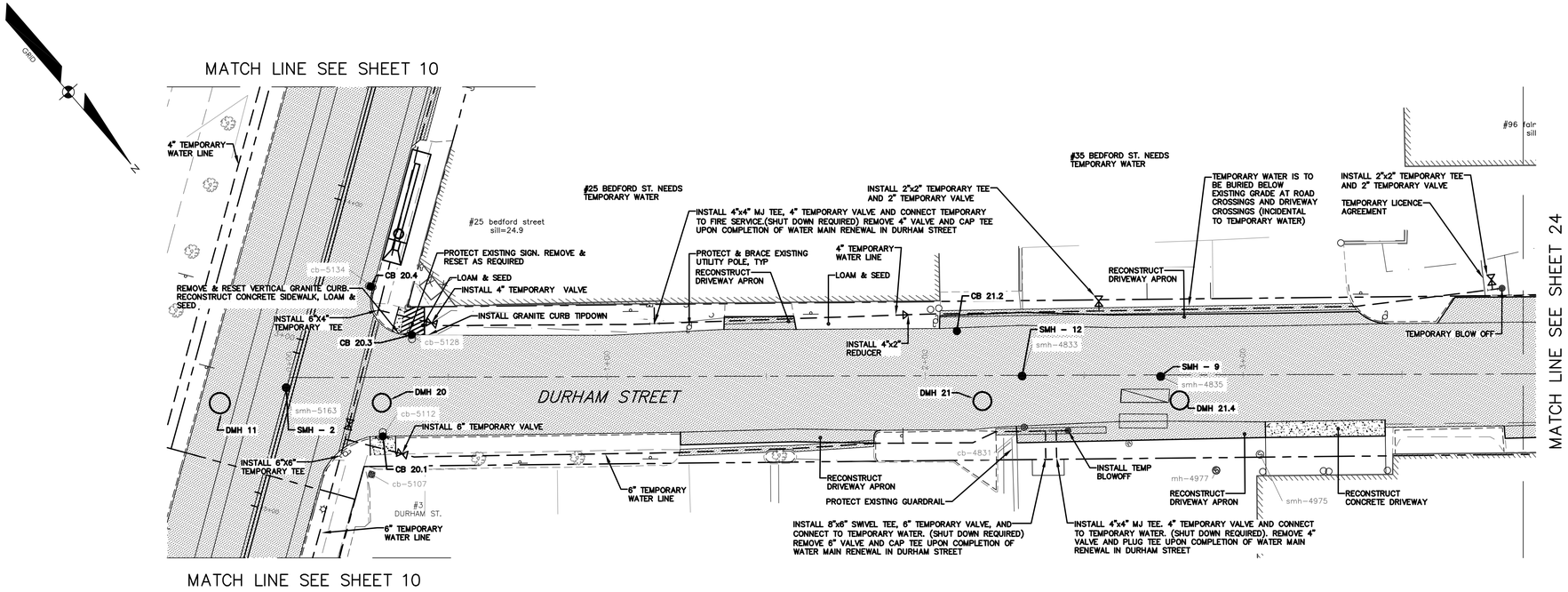


LAYOUT PLAN

SCALE: 1"=20'

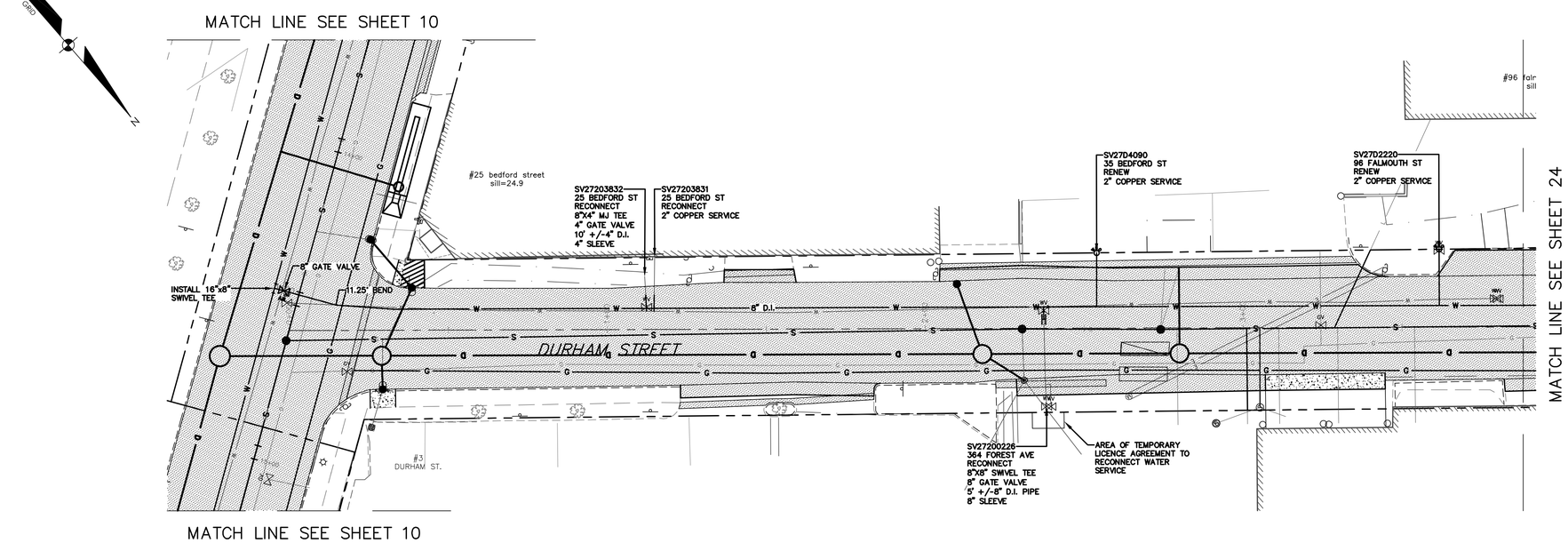


WATER PLAN

SCALE: 1"=20'

| | |
|---|---|
| BOX CUT | |
| TRENCH | |
| OVERLAY | |
| RIPRAP | |
| NEW CONCRETE SIDEWALK | |
| COBBLE STONE GUTTER | |
| BIT. SIDEWALK REPAIR | |
| LOAM & SEED | |

FEBRUARY 2018

Civil 3D 2013 Drawing Name:
17112 PP DURHAM STREET.dwg, TAB:DURHAM STREET LO1

CITY PROPERTY PLAN BOOK SHEETS:
I & J SHEETS: III-9, III-H

02/23/18 RAM ISSUE ADDENDUM #1

REFERENCES:

| | |
|---|---|
| DESIGN BY: | RLM |
| DRAWN BY: | SAP |
| CHECKED BY: | RAM |
| SCALE: | 1" = 20' |
| DATE: | 02.16.2018 |

STATE OF MAINE ROBERT A. McSORLEY No. 6258 LICENSED PROFESSIONAL ENGINEER

02.23.2018

# BEDFORD STREET SEWER SEPERATION PROJECT

DURHAM STREET LAYOUT & WATER PLAN

CITY OF PORTLAND, MAINE
PUBLIC WORKS DEPARTMENT
WATER RESOURCES DIVISION

RESURGAM CITY OF PORTLAND, MAINE

SHEET #
22 OF 46

PLAN NUMBER

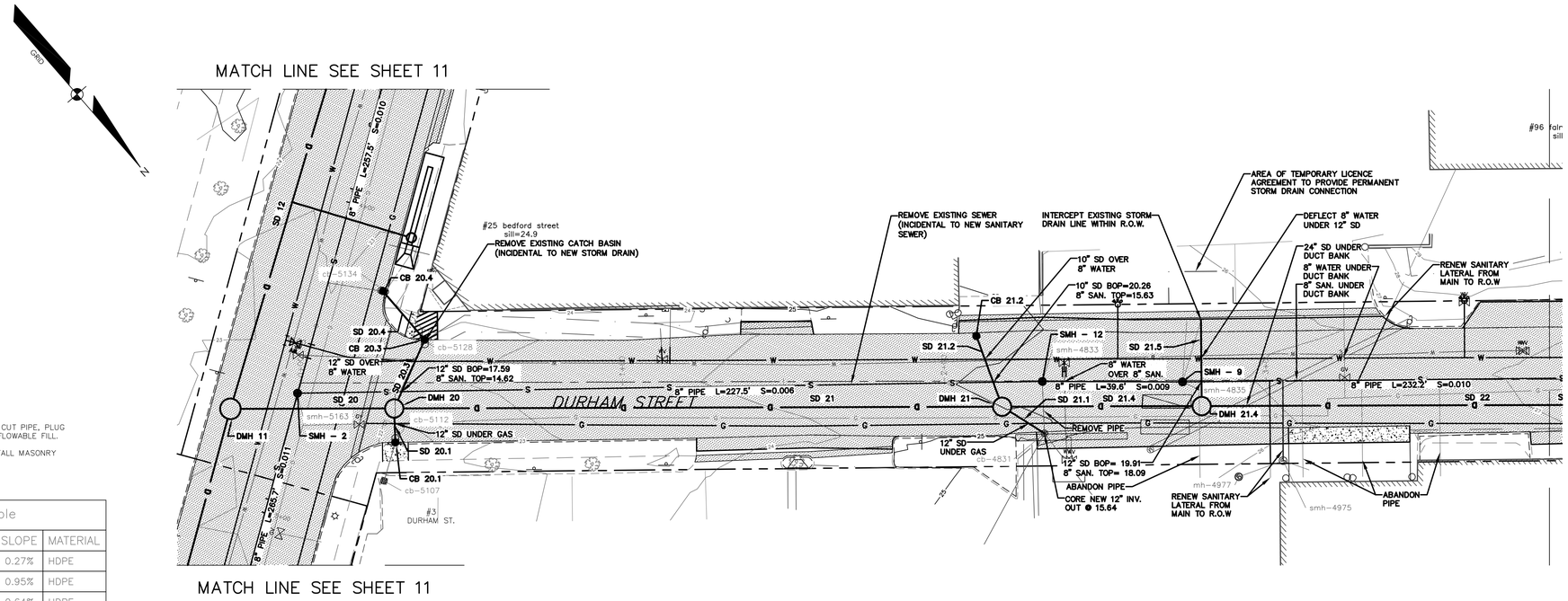


## NOTES:

1. ABANDON PIPE SHALL MEAN CUT PIPE, PLUG BOTH ENDS, AND FILL WITH FLOWABLE FILL.
2. PLUG PIPE SHALL MEAN INSTALL MASONRY PLUG OR PVC CAP.

| Pipe Table | | | | |
|---|---|---|---|---|
| NAME | SIZE | LENGTH | SLOPE | MATERIAL |
| SD 20 | 30" | 50.91' | 0.27% | HDPE |
| SD 20.1 | 10" | 10.57' | 0.95% | HDPE |
| SD 20.3 | 12" | 23.36' | 0.64% | HDPE |
| SD 21 | 30" | 189.00' | 0.29% | HDPE |
| SD 21.1 | 12" | 15.50' | 0.39% | HDPE |
| SD 21.2 | 10" | 23.41' | 0.43% | HDPE |
| SD 21.4 | 24" | 62.00' | 0.94% | HDPE |
| SD 21.5 | 12" | 26.75' | 1.12% | HDPE |
| SD 22 | 24" | 216.00' | 1.04% | HDPE |

## PLAN

SCALE: 1"=20'

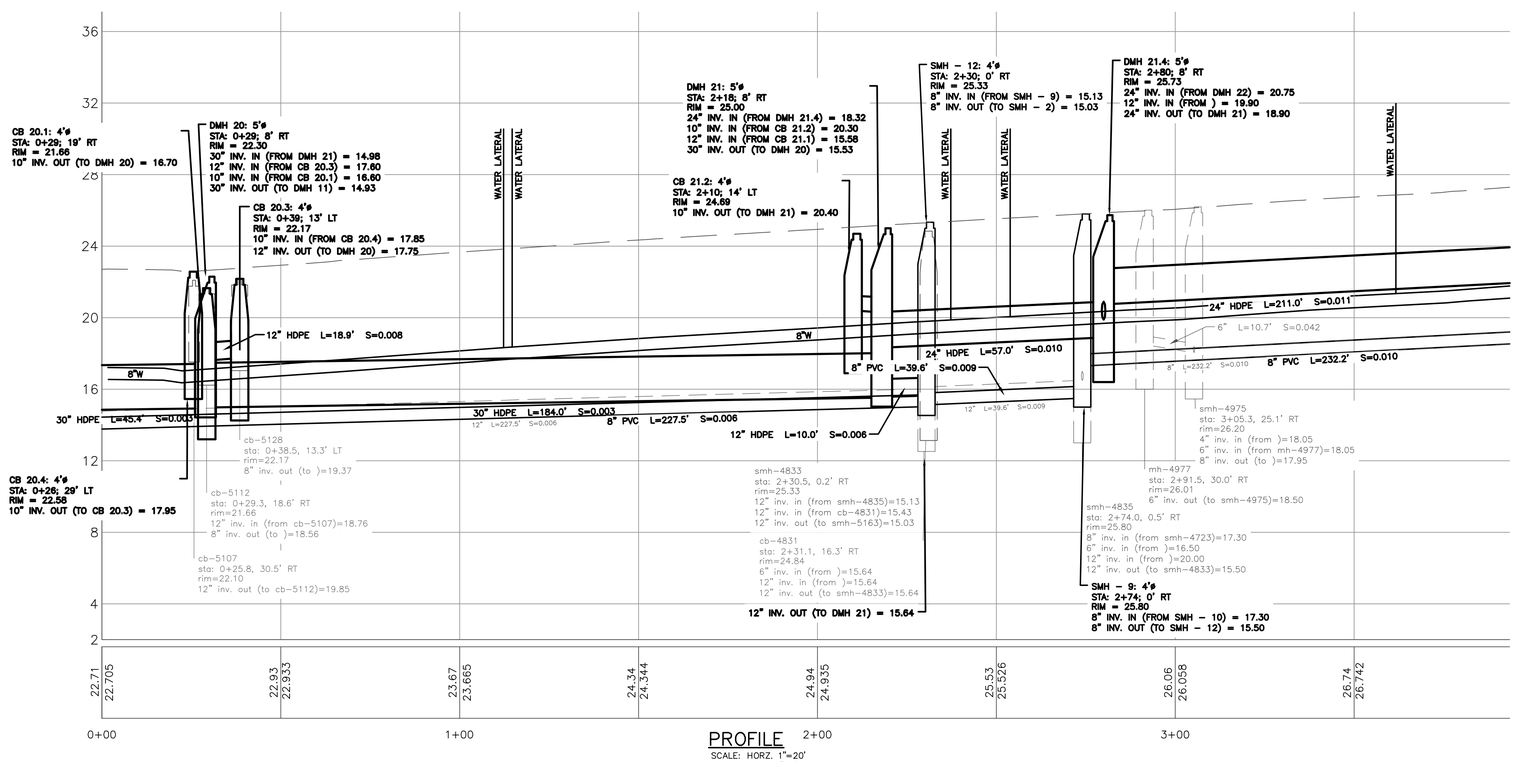


## PROFILE

SCALE: HORZ. 1"=20'
VERT 1"=4'

FEBRUARY 2018

REFERENCES:

Civil 3D 2013 Drawing Name:
17112 PP DURHAM STREET.dwg, TAB:DURHAM STREET PP1

CITY PROPERTY PLAN BOOK SHEETS:
I & I SHEETS: III-9, III-11

| | |
|---|---|
| DESIGN BY: | RLM |
| DRAWN BY: | SAP |
| CHECKED BY: | RAM |
| SCALE: | 1" = 20' |
| DATE: | 02. 16.2018 |

STATE OF MAINE
ROBERT L. MCSPERLEY
No. 8569
LICENSED
PROFESSIONAL ENGINEER

BEDFORD STREET
SEWER SEPERATION PROJECT

PLAN & PROFILE - DURHAM STREET
STA. 0+00 TO STA. 3+75

CITY OF PORTLAND, MAINE
PUBLIC WORKS DEPARTMENT
WATER RESOURCES DIVISION

RESURGAM
CITY OF PORTLAND, MAINE

SHEET #
23 OF 46

PLAN NUMBER

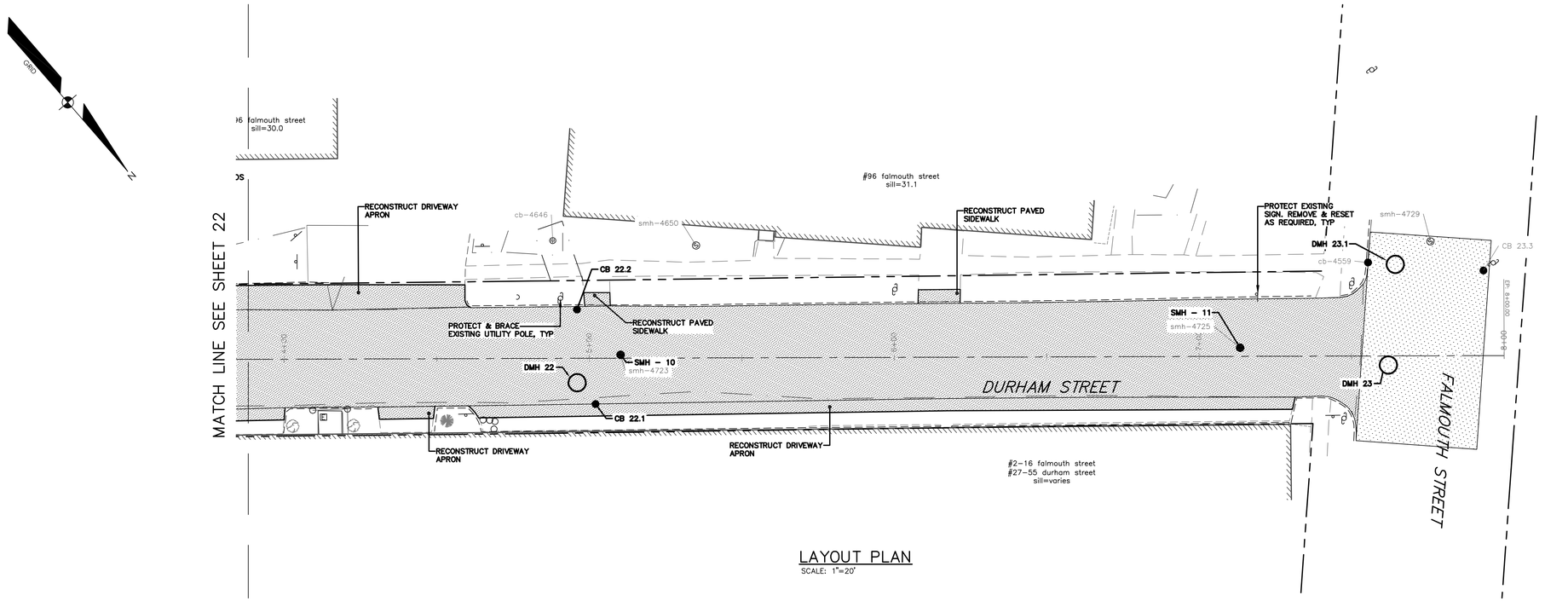


LAYOUT PLAN

SCALE: 1"=20'

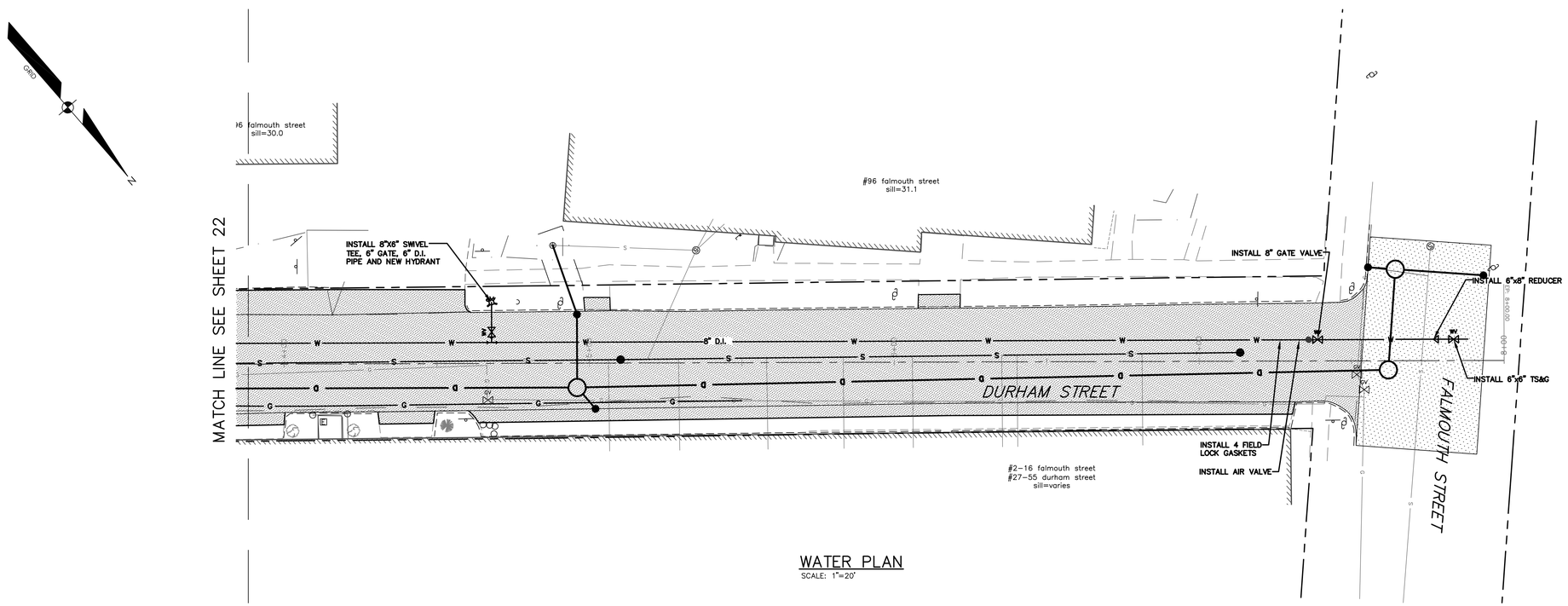


WATER PLAN

SCALE: 1"=20'

BOX CUT

TRENCH

OVERLAY

RIPRAP

NEW CONCRETE SIDEWALK

COBBLE STONE GUTTER

BIT. SIDEWALK REPAIR

LOAM & SEED

FEBRUARY 2018

Civil 3D 2013 Drawing Name:
17112 PP DURHAM STREET.dwg, TAB:DURHAM STREET LO2

REFERENCES:

CITY PROPERTY PLAN BOOK SHEETS:
I & J SHEETS: III-9, III-11

| | |
|---|---|
| DESIGN BY: RLM | DATE: 02. 16. 2018 |
| DRAWN BY: SAP | |
| CHECKED BY: RAM | |
| SCALE: 1" = 20' | |

STATE OF MAINE ROBERT A. McSORLEY No. 4568 LICENSED PROFESSIONAL ENGINEER

# BEDFORD STREET SEWER SEPERATION PROJECT

DURHAM STREET LAYOUT & WATER PLAN

CITY OF PORTLAND, MAINE
PUBLIC WORKS DEPARTMENT
WATER RESOURCES DIVISION

RESURGAM CITY OF PORTLAND, MAINE

SHEET #
24 OF 46

PLAN NUMBER

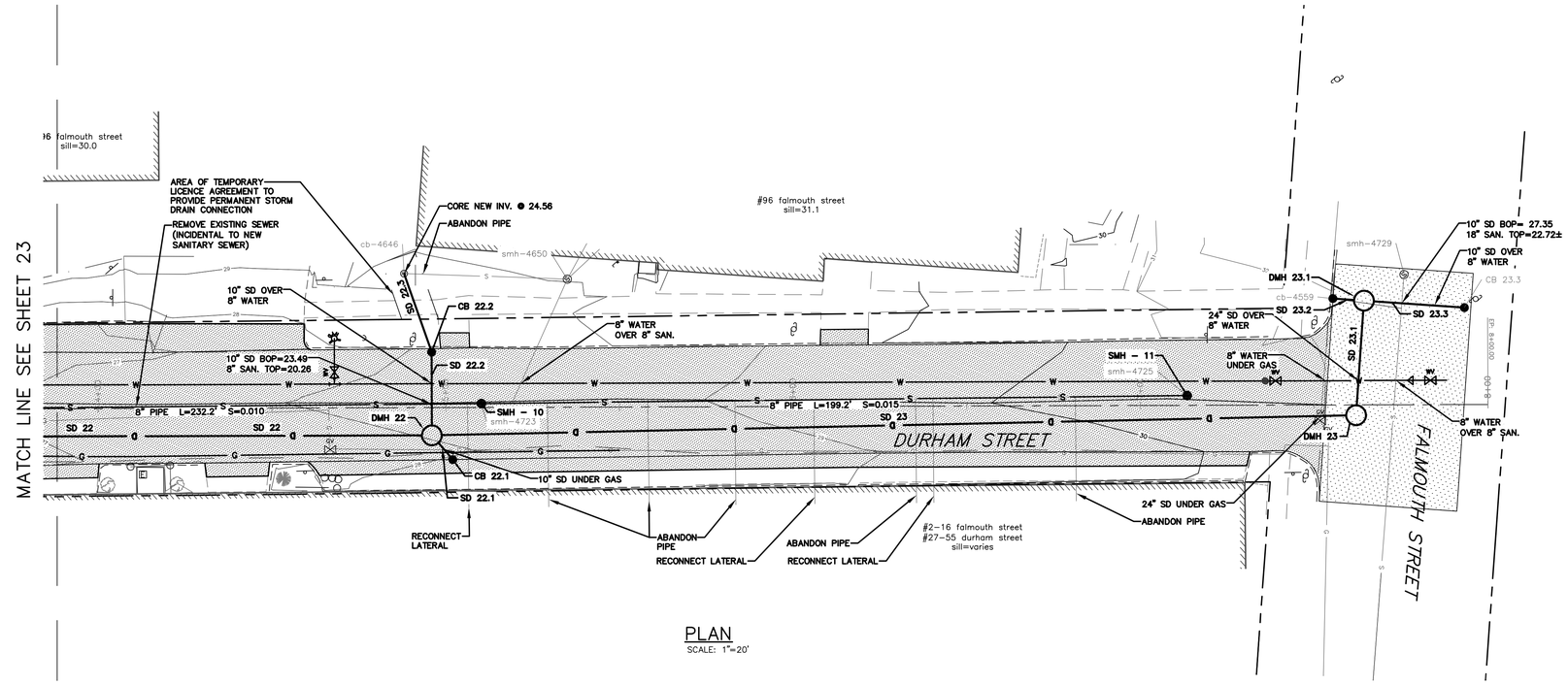


## PLAN

SCALE: 1"=20'

## NOTES:

1. ABANDON PIPE SHALL MEAN CUT PIPE, PLUG BOTH ENDS, AND FILL WITH FLOWABLE FILL.
2. PLUG PIPE SHALL MEAN INSTALL MASONRY PLUG OR PVC CAP.

| Pipe Table | | | | |
|---|---|---|---|---|
| NAME | SIZE | LENGTH | SLOPE | MATERIAL |
| SD 22 | 24" | 216.00' | 1.04% | HDPE |
| SD 22.1 | 10" | 9.22' | 1.08% | HDPE |
| SD 22.2 | 10" | 24.00' | 0.83% | HDPE |
| SD 22.3 | 10" | 23.99' | 1.00% | HDPE |
| SD 23 | 24" | 266.05' | 1.05% | HDPE |
| SD 23.1 | 24" | 33.11' | 0.60% | HDPE |
| SD 23.2 | 10" | 8.94' | 2.24% | HDPE |
| SD 23.3 | 10" | 28.99' | 0.69% | HDPE |

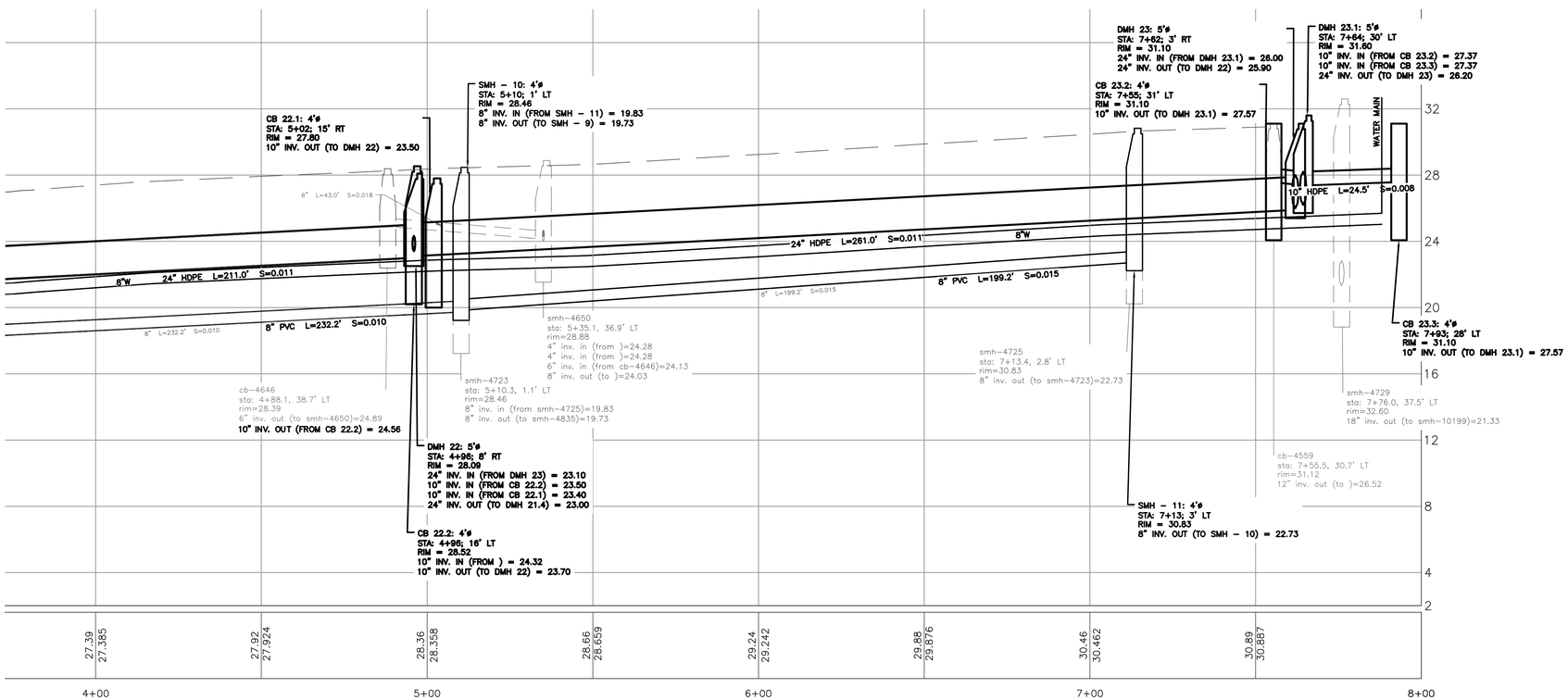


## PROFILE

SCALE: HORZ. 1"=20'
VERT 1"=4'

FEBRUARY 2018

Civil 3D 2013 Drawing Name:
17112 PP DURHAM STREET.dwg, TAB:DURHAM STREET PP2

CITY PROPERTY PLAN BOOK SHEETS:
I & I SHEETS: III-9, III-11

REFERENCES:

DESIGN BY: RLM
DRAWN BY: SAP
CHECKED BY: RAM
SCALE: 1" = 20'
DATE: 02. 16. 2018

STATE OF MAINE
ROBERT McSORLEY
No. 5569
LICENSED PROFESSIONAL ENGINEER

BEDFORD STREET
SEWER SEPERATION PROJECT

PLAN & PROFILE - DURHAM STREET
STA. 3+75 TO STA. 7+60

CITY OF PORTLAND, MAINE
PUBLIC WORKS DEPARTMENT
WATER RESOURCES DIVISION

CITY OF PORTLAND, MAINE
RESURGAM

SHEET #
25 OF 46

PLAN NUMBER

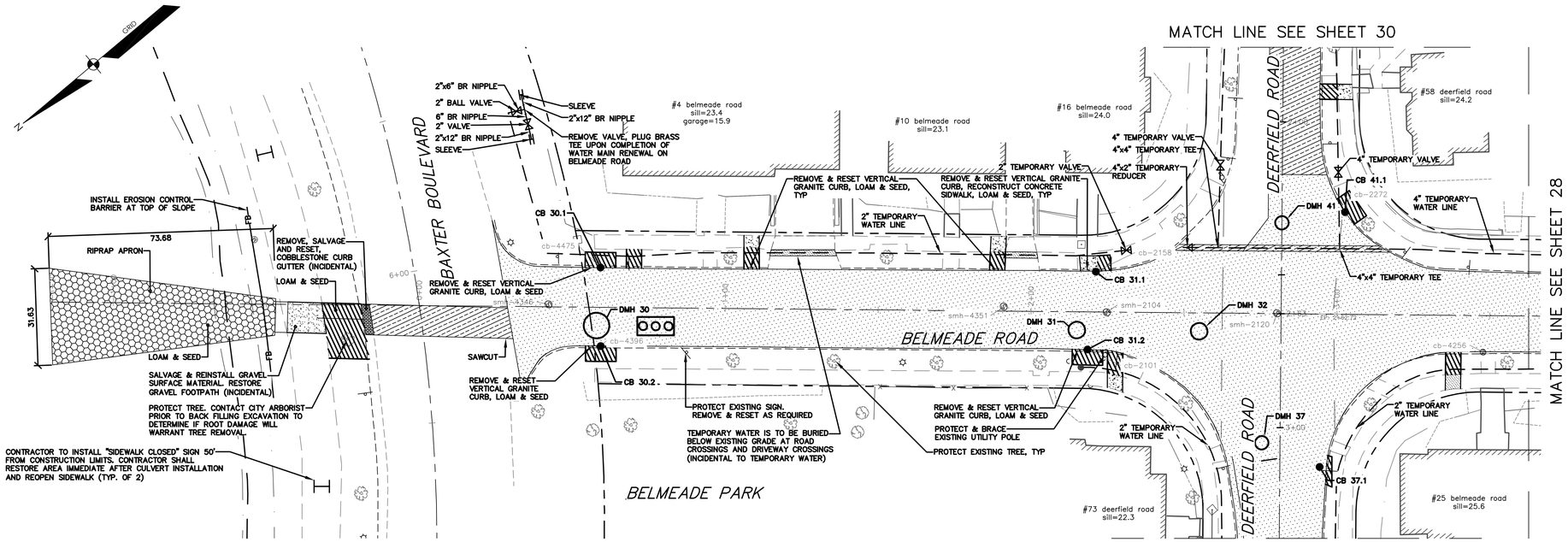


LAYOUT PLAN

SCALE: 1"=20'

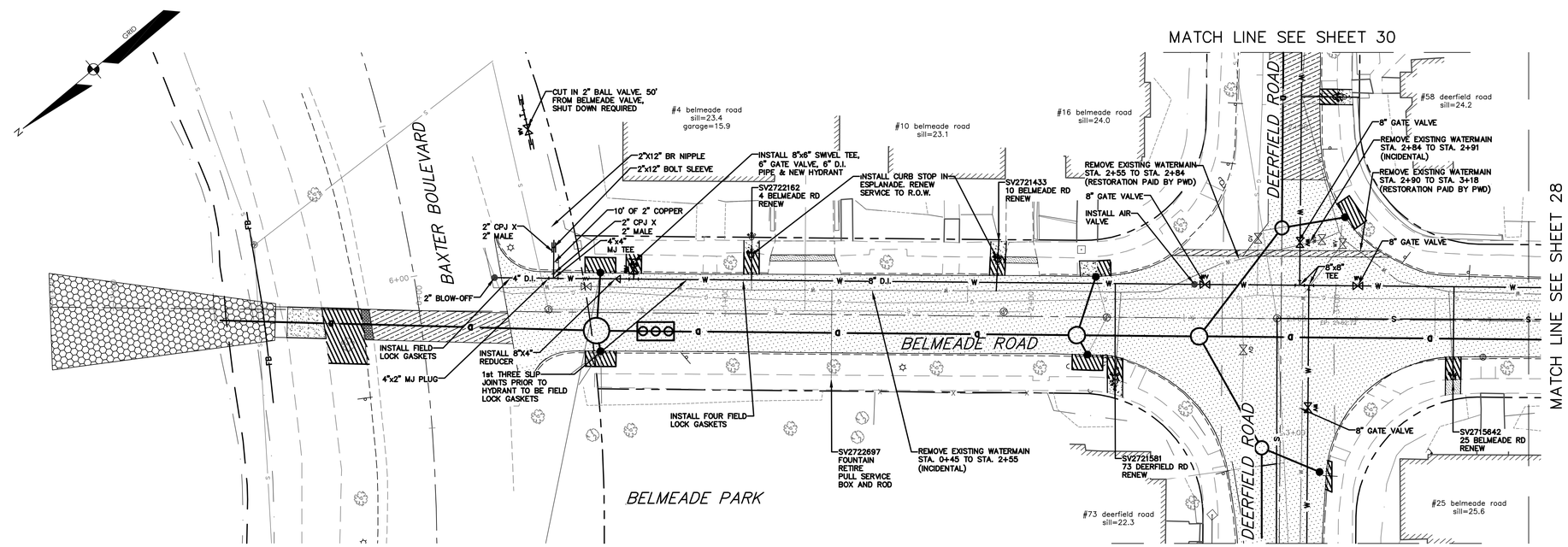


WATER PLAN

SCALE: 1"=20'

BOX CUT

TRENCH

OVERLAY

RIPRAP

NEW CONCRETE SIDEWALK

COBBLE STONE GUTTER

BIT. SIDEWALK REPAIR

LOAM & SEED

FEBRUARY 2018

03/07/18 RAM ISSUE ADDENDUM #2

02/23/18 RAM ISSUE ADDENDUM #1

REFERENCES:

Civil 3D 2013 Drawing Name: 17112 PP BELMEADE ROAD.dwg, TAB:BELMEADE ROAD LO1

CITY PROPERTY PLAN BOOK SHEETS: I & J SHEETS: 1#-9, 1I#-11

| | |
|---|---|
| DESIGN BY: | RLM |
| DRAWN BY: | SAP |
| CHECKED BY: | RAM |
| SCALE: | 1" = 20' |
| DATE: | 02. 16.2018 |

STATE OF MAINE ROBERT A. MCSPERLEY No. 8569 LICENSED PROFESSIONAL ENGINEER

# BEDFORD STREET SEWER SEPERATION PROJECT

BELMEADE ROAD LAYOUT & WATER PLAN

CITY OF PORTLAND, MAINE
PUBLIC WORKS DEPARTMENT
WATER RESOURCES DIVISION

RESURGAM CITY OF PORTLAND, MAINE

SHEET # 26 OF 46

PLAN NUMBER

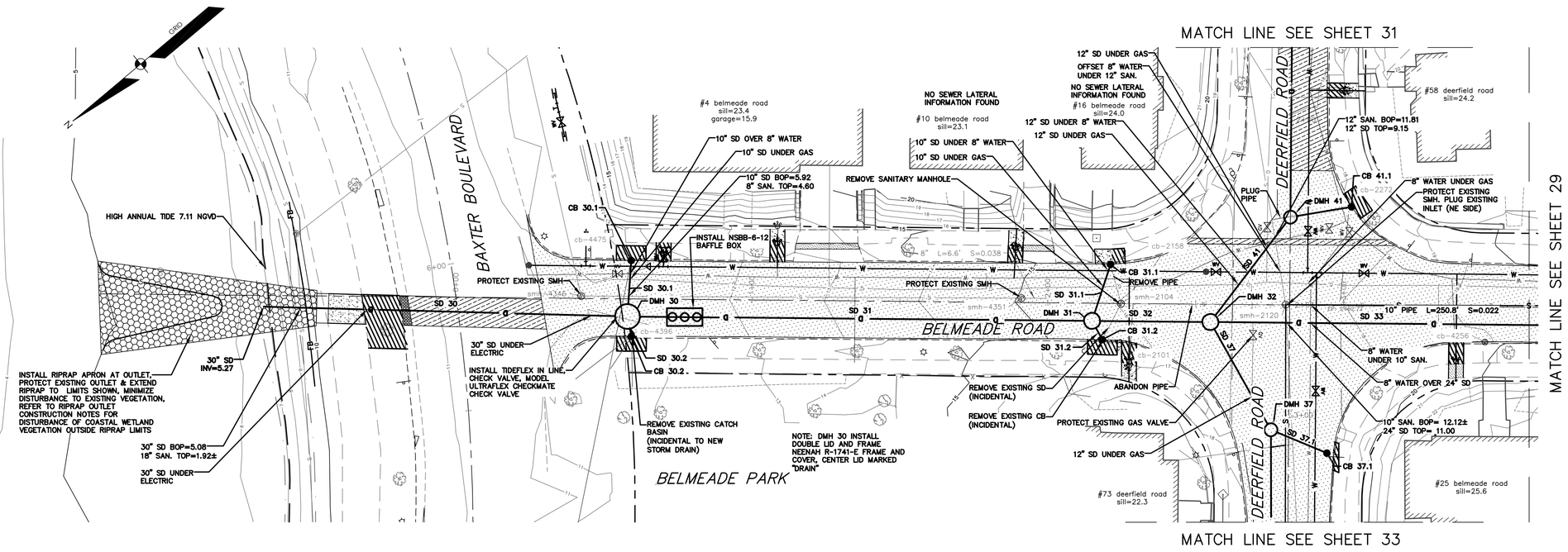


PLAN
SCALE: 1"=20'

## NOTES:

1. ABANDON PIPE SHALL MEAN CUT PIPE, PLUG BOTH ENDS, AND FILL WITH FLOWABLE FILL.
2. PLUG PIPE SHALL MEAN INSTALL MASONRY PLUG OR PVC CAP.

| Pipe Table | | | | |
|---|---|---|---|---|
| NAME | SIZE | LENGTH | SLOPE | MATERIAL |
| SD 37 | 12" | 41.81' | 3.13% | HDPE |
| SD 33 | 24" | 379.71' | 3.15% | HDPE |
| SD 32 | 30" | 40.00' | 2.00% | HDPE |
| SD 31 | 30" | 157.00' | 0.43% | HDPE |
| SD 30 | 30" | 122.99' | 0.49% | HDPE |
| SD 41 | 12" | 44.60' | 0.49% | HDPE |
| SD 30.2 | 10" | 6.85' | 0.73% | HDPE |
| SD 30.1 | 10" | 19.03' | 0.53% | HDPE |
| SD 31.2 | 10" | 7.23' | 0.69% | HDPE |
| SD 31.1 | 10" | 20.09' | 0.50% | HDPE |

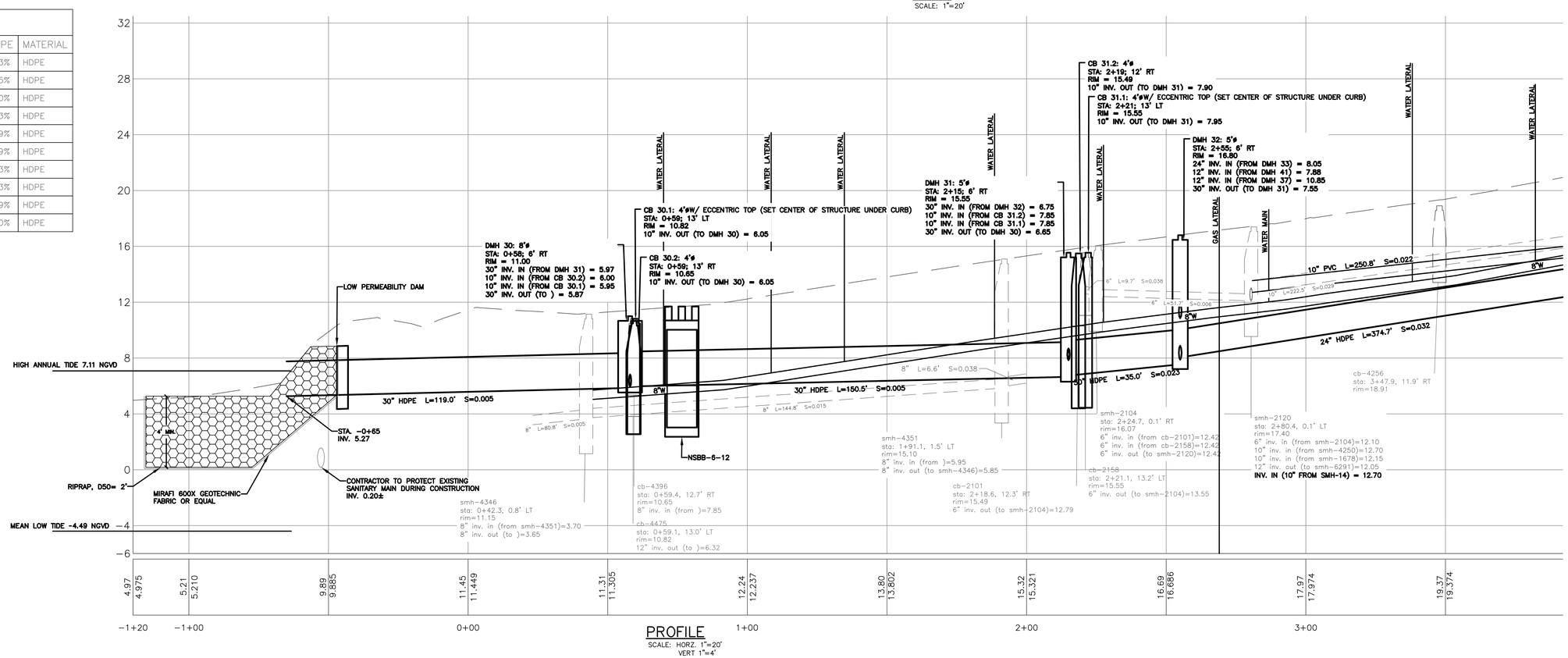


PROFILE
SCALE: HORZ. 1"=20'
VERT 1"=4'

FEBRUARY 2018

03/07/18 RAM ISSUE ADDENDUM #2
02/28/18 RAM LEVEL 1 SITE PLAN COMMENTS

REFERENCES:

Civil 3D 2013 Drawing Name:
17112 PP BELMEADE ROAD.dwg, TAB:BELMEADE ROAD PP1

CITY PROPERTY PLAN BOOK SHEETS:
I & J SHEETS: III-9, III-11

| | |
|---|---|
| DESIGN BY: | BLM |
| DRAWN BY: | AJP |
| CHECKED BY: | RAM |
| SCALE: | 1"=20' |
| DATE: | 02.15.2018 |

STATE OF MAINE ROBERT A. MOSHER No. 6059 LICENSED PROFESSIONAL ENGINEER
03.07.2018

BEDFORD STREET
SEWER SEPERATION PROJECT

PLAN & PROFILE - BELMEADE ROAD
STA. -0+85 TO STA. 3+75

CITY OF PORTLAND, MAINE
PUBLIC WORKS DEPARTMENT
WATER RESOURCES DIVISION

CITY OF PORTLAND, MAINE RESURGAM

SHEET #
27 OF 46

PLAN NUMBER

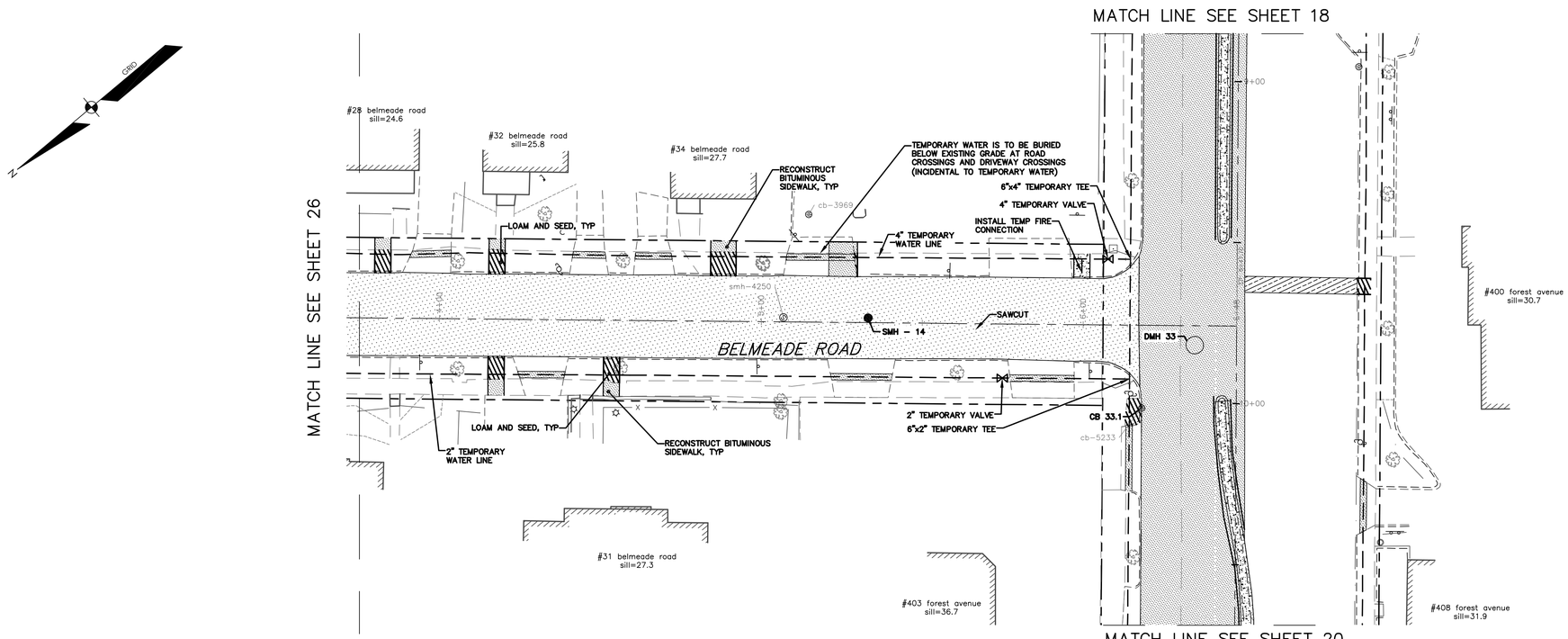


LAYOUT PLAN

SCALE: 1"=20'

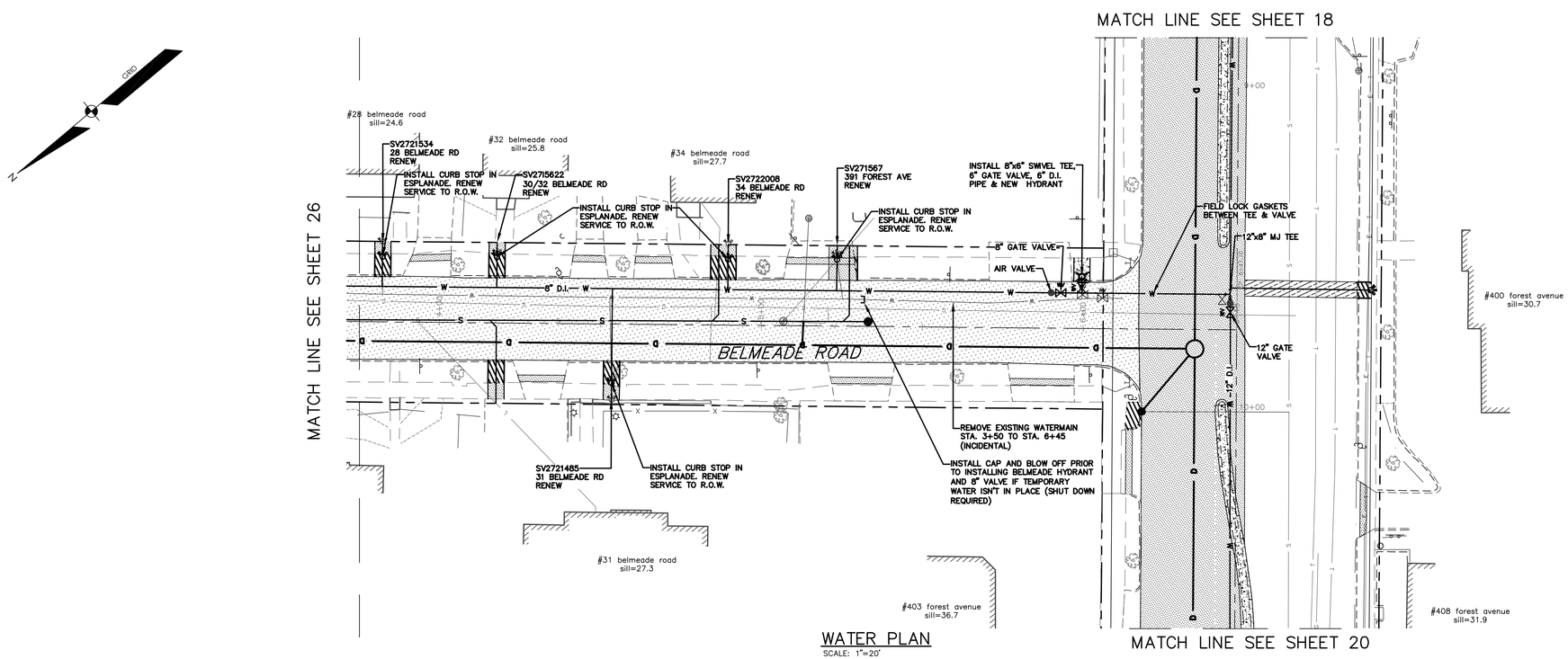


WATER PLAN

SCALE: 1"=20'

BOX CUT

TRENCH

OVERLAY

RIPRAP

NEW CONCRETE SIDEWALK

COBBLE STONE GUTTER

BIT. SIDEWALK REPAIR

LOAM & SEED

FEBRUARY 2018

02/23/18 RAM ISSUE ADDENDUM #1

REFERENCES:

Civil 3D 2013 Drawing Name:
17112 PP BELMEADE ROAD.dwg, TAB:BELMEADE ROAD LO2

CITY PROPERTY PLAN BOOK SHEETS:
1 & 1 SHEETS: III-9, III-11

| | |
|---|---|
| DESIGN BY: | RLM |
| DRAWN BY: | SAP |
| CHECKED BY: | RAM |
| SCALE: | 1" = 20' |
| DATE: | 02. 16. 2018 |

STATE OF MAINE ROBERT A. McSPERLEY No. 6258 LICENSED PROFESSIONAL ENGINEER

02. 23. 2018

BEDFORD STREET
SEWER SEPERATION PROJECT

BELMEADE ROAD LAYOUT & WATER PLAN

CITY OF PORTLAND, MAINE
PUBLIC WORKS DEPARTMENT
WATER RESOURCES DIVISION

RESURGAM CITY OF PORTLAND, MAINE

SHEET #
28 OF 46

PLAN NUMBER

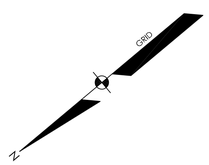


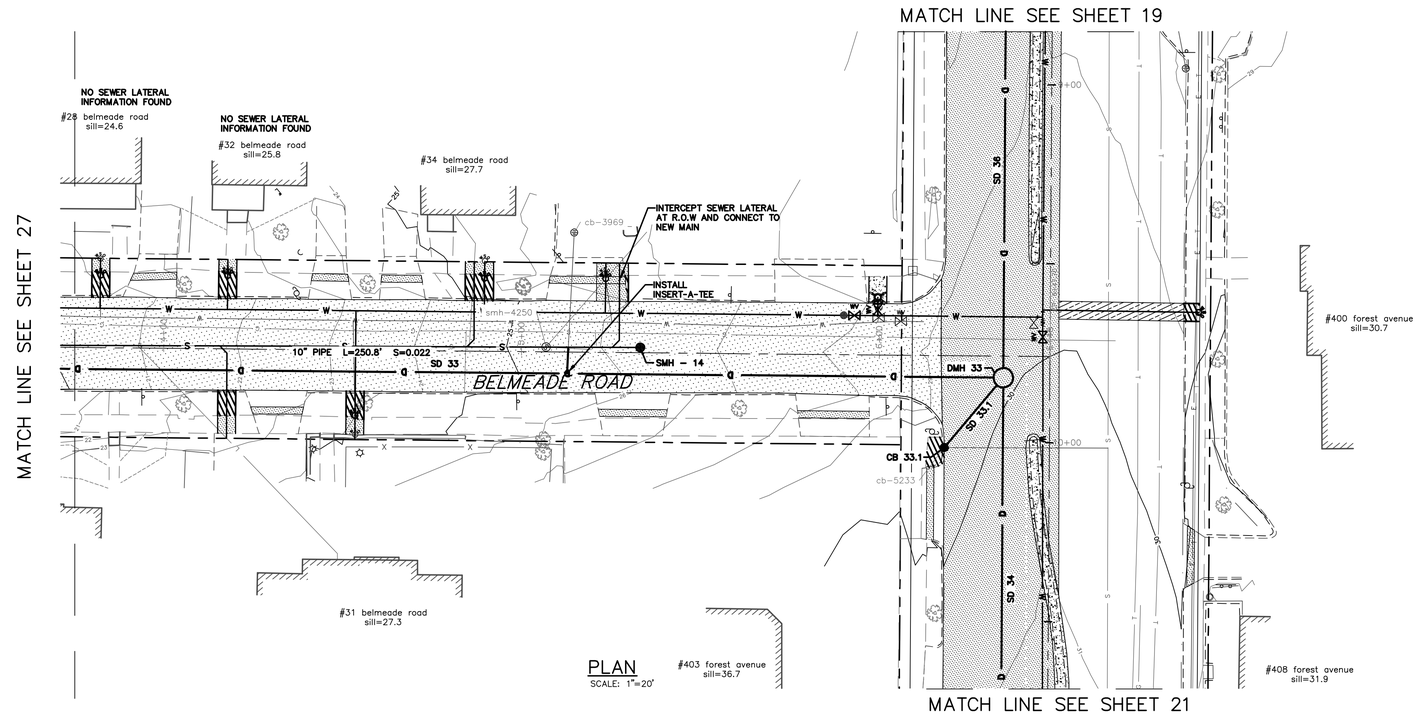


PLAN
SCALE: 1"=20'

## NOTES:

1. ABANDON PIPE SHALL MEAN CUT PIPE, PLUG BOTH ENDS, AND FILL WITH FLOWABLE FILL.
2. PLUG PIPE SHALL MEAN INSTALL MASONRY PLUG OR PVC CAP.
3. FIELD LOCATE EXISTING SEWER LATERALS AND RENEW FROM MAIN TO R.O.W (TYPICAL IN AREAS WITH NEW SEWER INSTALLATION)

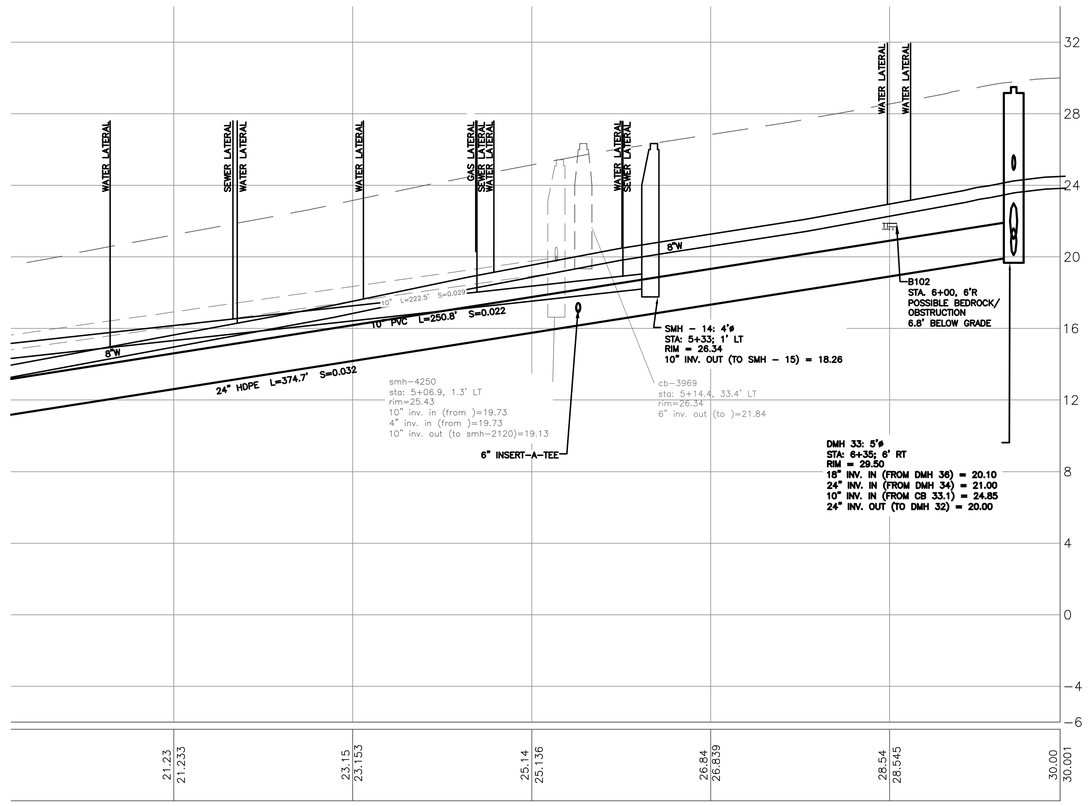


PROFILE
SCALE: HORZ. 1"=20'
VERT 1"=4'

| Pipe Table | | | | |
|---|---|---|---|---|
| NAME | SIZE | LENGTH | SLOPE | MATERIAL |
| SD 33.1 | 10" | 25.56' | 0.98% | HDPE |
| SD 36 | 18" | 115.90' | 0.52% | HDPE |
| SD 34 | 24" | 168.10' | 0.89% | HDPE |
| SD 33 | 24" | 379.71' | 3.15% | HDPE |

NOTE: THAT CONTRACTOR MAY ENCOUNTER REMNANT PORTLAND RAIL COMPANY RAILROAD TRACKS TO THE EAST OF THE CENTER LINE OF FOREST AVENUE.

FEBRUARY 2018

Civil 3D 2013 Drawing Name:
17112 PP BELMEADE ROAD.dwg, TAB:BELMEADE ROAD PP2

REFERENCES:

CITY PROPERTY PLAN BOOK SHEETS:
1 & 1 SHEETS: 111-9, 111-11

| | |
|---|---|
| DESIGN BY: | RLM |
| DRAWN BY: | AAP |
| CHECKED BY: | RAM |
| SCALE: | 1" = 20' |
| DATE: | 02.16.2018 |

STATE OF MAINE ROBERT A. MCSORLEY No. 2559 PROFESSIONAL ENGINEER

BEDFORD STREET
SEWER SEPERATION PROJECT

PLAN & PROFILE - BELMEADE ROAD
STA. 3+75 TO STA 6+47.69

CITY OF PORTLAND, MAINE
PUBLIC WORKS DEPARTMENT
WATER RESOURCES DIVISION

RESURGAM CITY OF PORTLAND, MAINE

SHEET #
29 OF 46

PLAN NUMBER

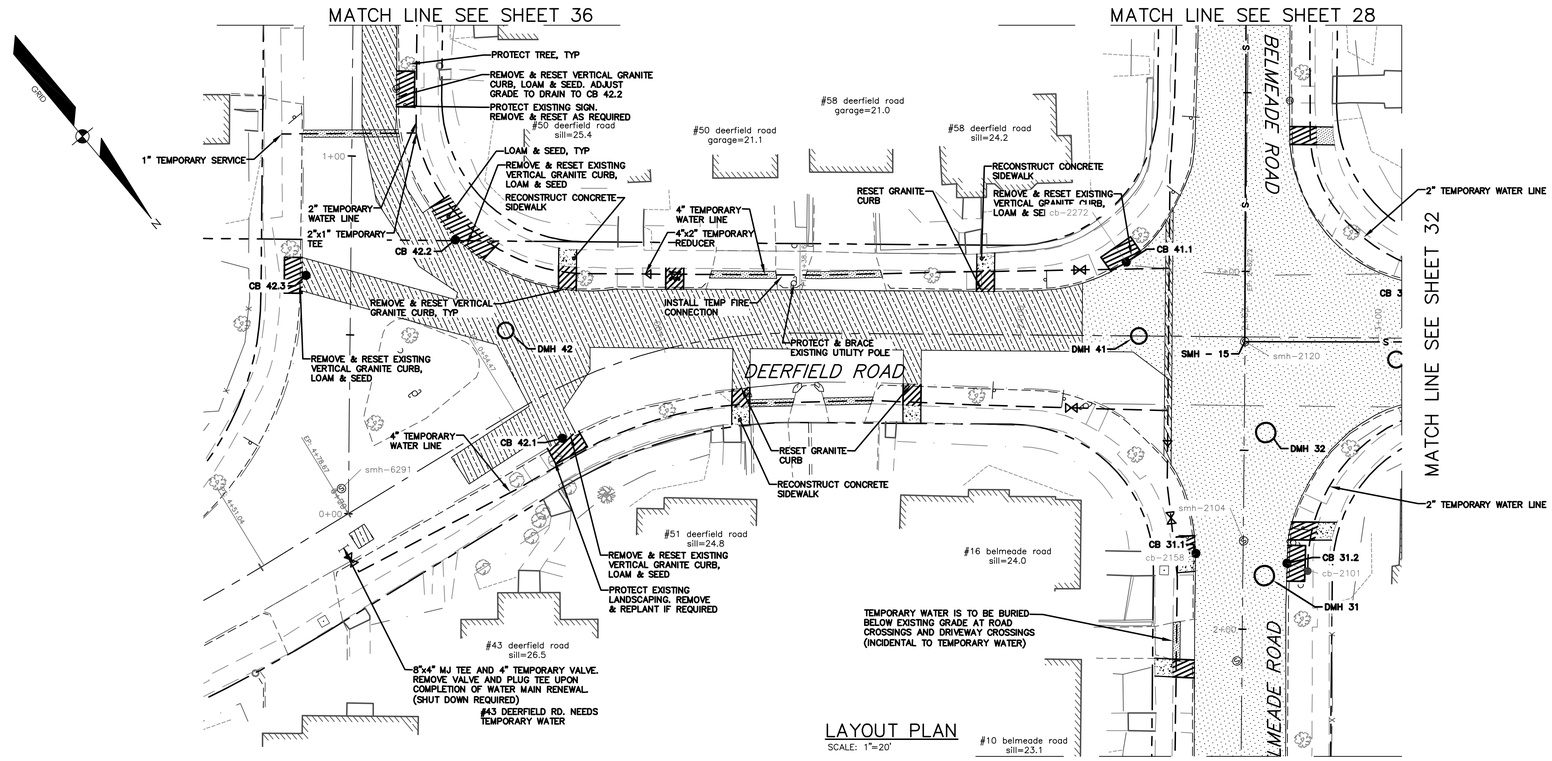


## LAYOUT PLAN

SCALE: 1"=20'

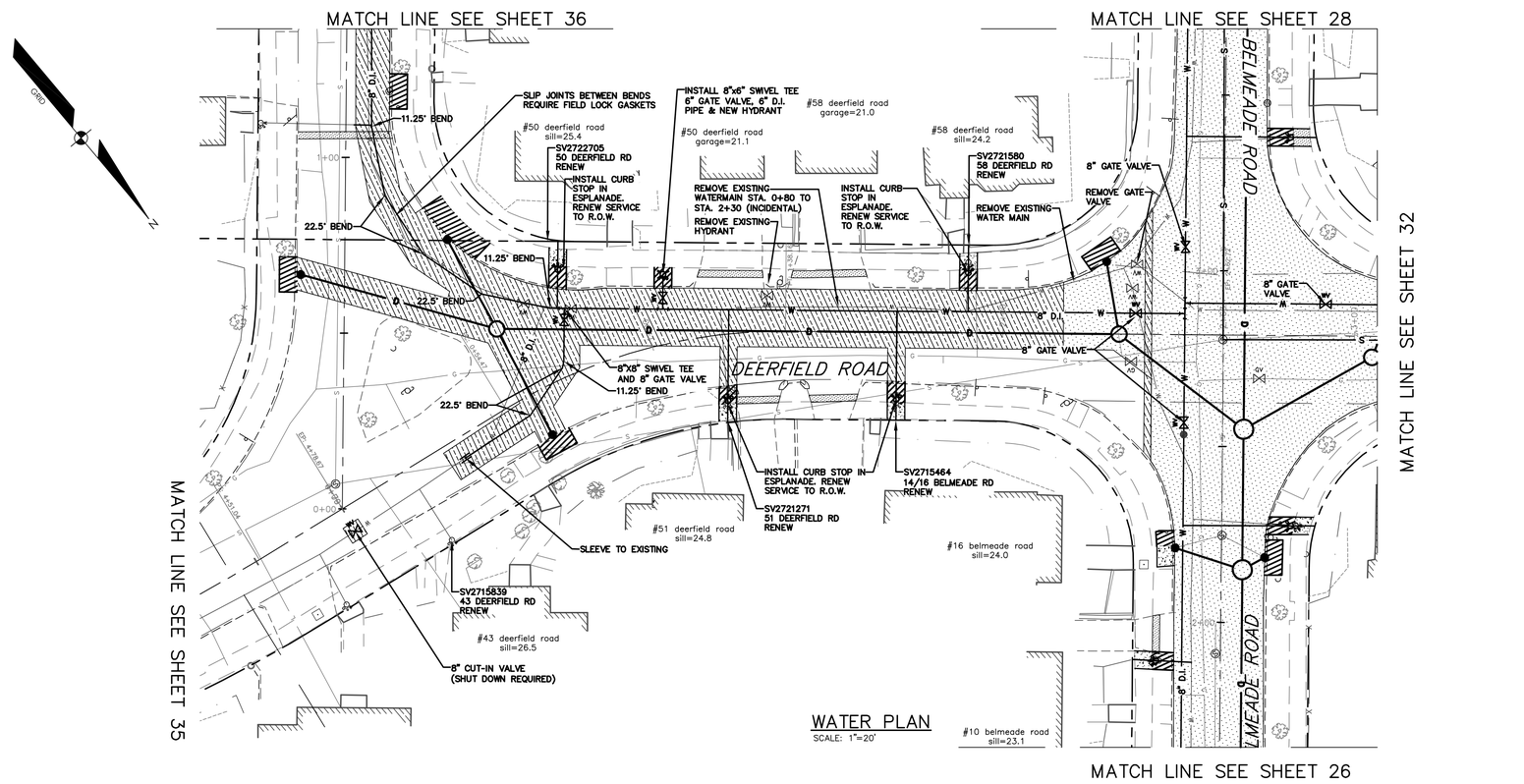


## WATER PLAN

SCALE: 1"=20'

| | |
|---|---|
| BOX CUT | |
| TRENCH | |
| OVERLAY | |
| RIPRAP | |
| NEW CONCRETE SIDEWALK | |
| COBBLE STONE GUTTER | |
| BIT. SIDEWALK REPAIR | |
| LOAM & SEED | |

FEBRUARY 2018

Civil 3D 2013 Drawing Name:
17112 PP DEERFIELD ROAD.dwg, TAB:DEERFIELD CENTER LO1

CITY PROPERTY PLAN BOOK SHEETS:
I & J SHEETS: III-9, III-11

△ 02/23/18 RAM ISSUE ADDENDUM #1

REFERENCES:

| | |
|---|---|
| DESIGN BY: | RLM |
| DRAWN BY: | XAP |
| CHECKED BY: | RAM |
| SCALE: | 1" = 20' |
| DATE: | 02. 16.2018 |

STATE OF MAINE ROBERT L. MCSORLEY No. 4556 LICENSED PROFESSIONAL ENGINEER 02. 23.2018

# BEDFORD STREET SEWER SEPERATION PROJECT

DEERFIELD ROAD LAYOUT & WATER PLAN

CITY OF PORTLAND, MAINE
PUBLIC WORKS DEPARTMENT
WATER RESOURCES DIVISION

RESURGAM CITY OF PORTLAND, MAINE

SHEET #
30 OF 46

PLAN NUMBER

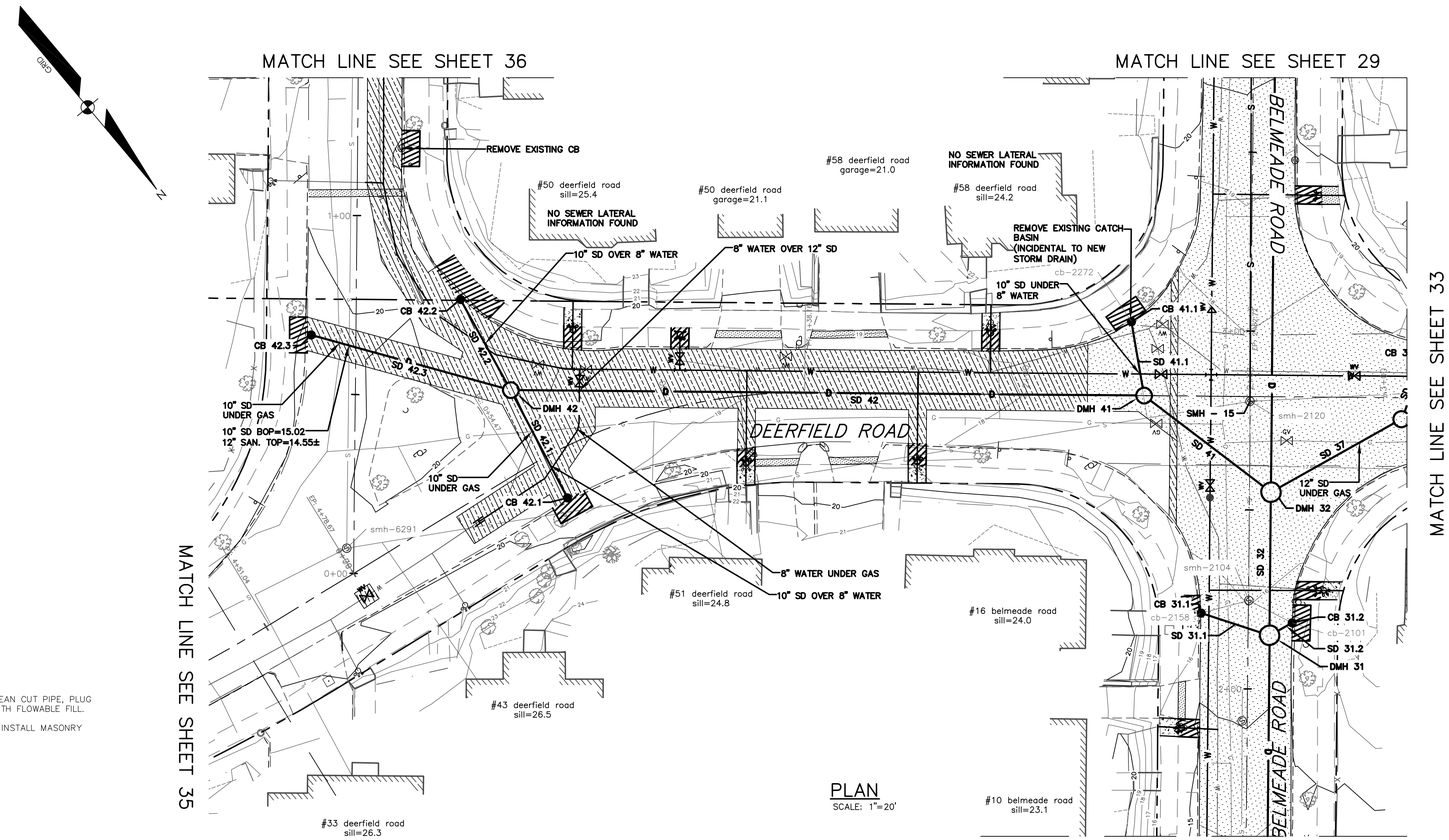


## PLAN

SCALE: 1"=20'

## NOTES:

1. ABANDON PIPE SHALL MEAN CUT PIPE, PLUG BOTH ENDS, AND FILL WITH FLOWABLE FILL.
2. PLUG PIPE SHALL MEAN INSTALL MASONRY PLUG OR PVC CAP.

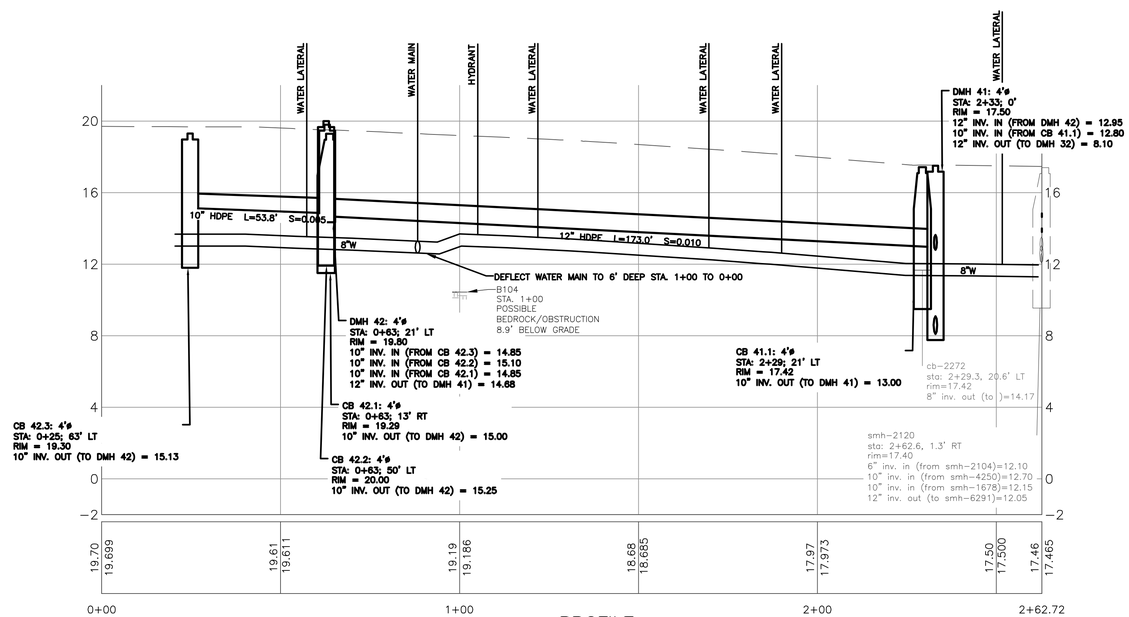


## PROFILE

SCALE: HORZ. 1"=20'
VERT 1"=4'

| Pipe Table | | | | |
|---|---|---|---|---|
| NAME | SIZE | LENGTH | SLOPE | MATERIAL |
| SD 41 | 12" | 44.60' | 0.49% | HDPE |
| SD 41.1 | 10" | 20.92' | 0.96% | HDPE |
| SD 42 | 12" | 176.99' | 0.98% | HDPE |
| SD 42.1 | 10" | 34.02' | 0.44% | HDPE |
| SD 42.2 | 10" | 28.98' | 0.52% | HDPE |
| SD 42.3 | 10" | 57.82' | 0.48% | HDPE |

FEBRUARY 2018

REFERENCES:

Civil 3D 2013 Drawing Name:
17112 PP DEERFIELD ROAD.dwg, TAB:DEERFIELD CENTER PP1

CITY PROPERTY PLAN BOOK SHEETS:
I & I SHEETS: I#-9, I#-11

| | |
|---|---|
| DESIGN BY: | RLM |
| DRAWN BY: | SAP |
| CHECKED BY: | RAM |
| SCALE: | 1" = 20' |
| DATE: | 02. 16. 2018 |

STATE OF MAINE ROBERT A. McSPIRLEY No. 8589 LICENSED PROFESSIONAL ENGINEER

02. 16. 2018

# BEDFORD STREET SEWER SEPERATION PROJECT

PLAN & PROFILE - DEERFIELD ROAD
STA 0+00 TO STA. 2+62.72

CITY OF PORTLAND, MAINE
PUBLIC WORKS DEPARTMENT
WATER RESOURCES DIVISION

RESURGAM CITY OF PORTLAND, MAINE

SHEET #
31 OF 46

PLAN NUMBER

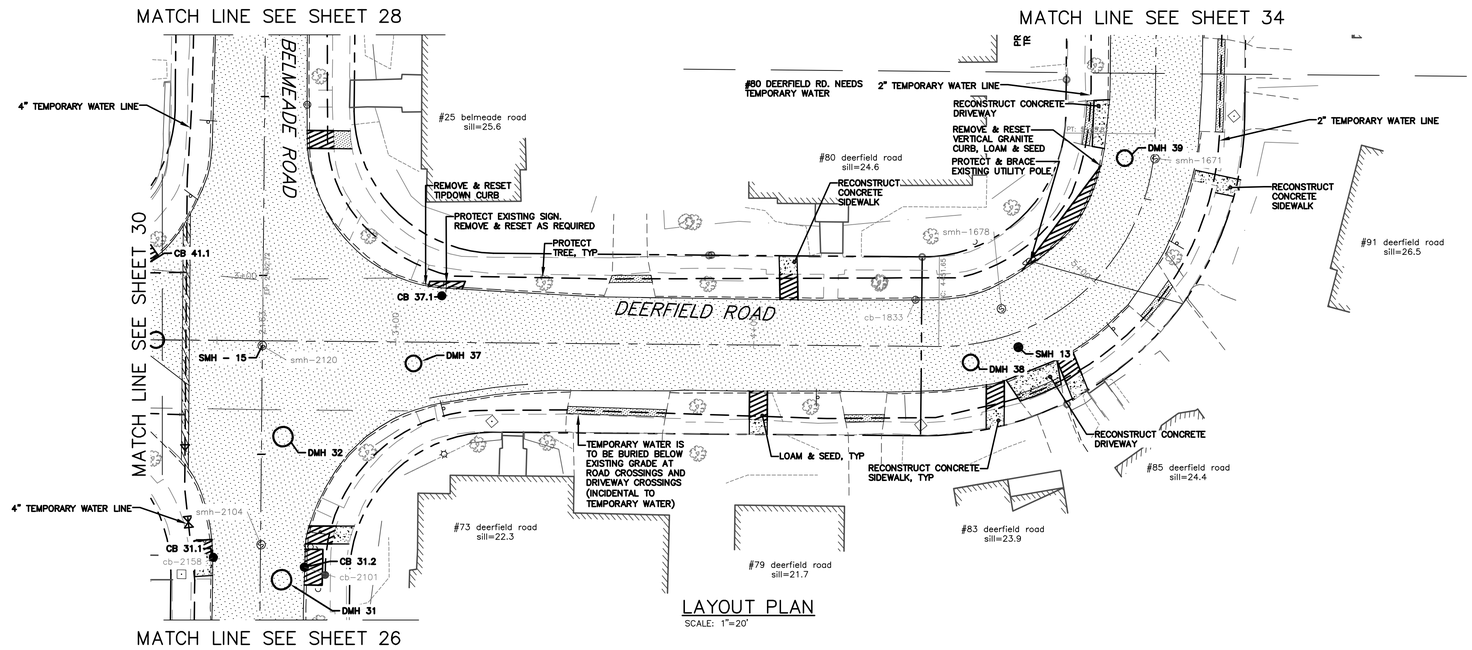


LAYOUT PLAN

SCALE: 1"=20'

BOX CUT
TRENCH
OVERLAY
RIPRAP
NEW CONCRETE SIDEWALK
COBBLE STONE GUTTER
BIT. SIDEWALK REPAIR
LOAM & SEED

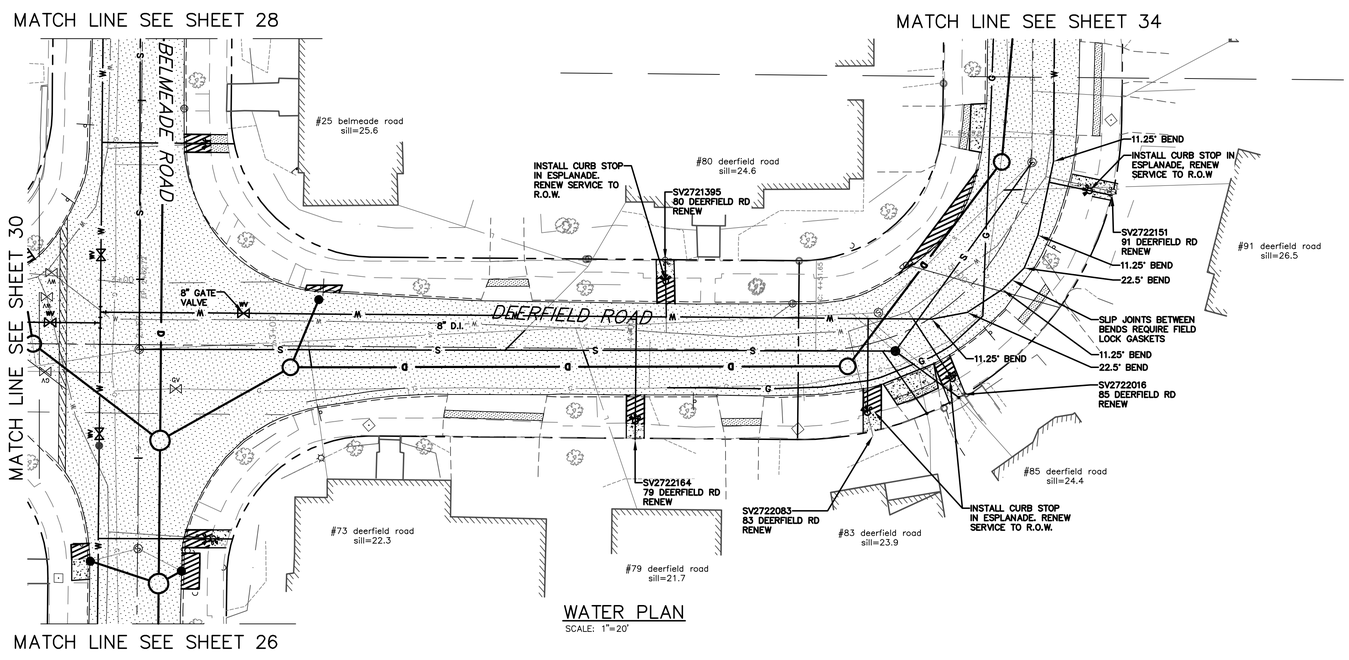


WATER PLAN

SCALE: 1"=20'

FEBRUARY 2018

Civil 3D 2013 Drawing Name:
17112 PP DEERFIELD ROAD.dwg, TAB:DEERFIELD WEST L01

CITY PROPERTY PLAN BOOK SHEETS:
1 & 1 SHEETS: III-9, III-11

02/23/18 RAM ISSUE ADDENDUM #1

REFERENCES:

DESIGN BY: RLM
DRAWN BY: AAP
CHECKED BY: RAM
SCALE: 1" = 20'
DATE: 02.16.2018

STATE OF MAINE ROBERT A. MCSORLEY No. 5558 LICENSED PROFESSIONAL ENGINEER
02.23.2018

BEDFORD STREET
SEWER SEPERATION PROJECT

DEERFIELD ROAD LAYOUT & WATER PLAN

CITY OF PORTLAND, MAINE
PUBLIC WORKS DEPARTMENT
WATER RESOURCES DIVISION

CIVITAS RESURGAM NE
CITY OF PORTLAND, MAINE

SHEET #
32 OF 46

PLAN NUMBER

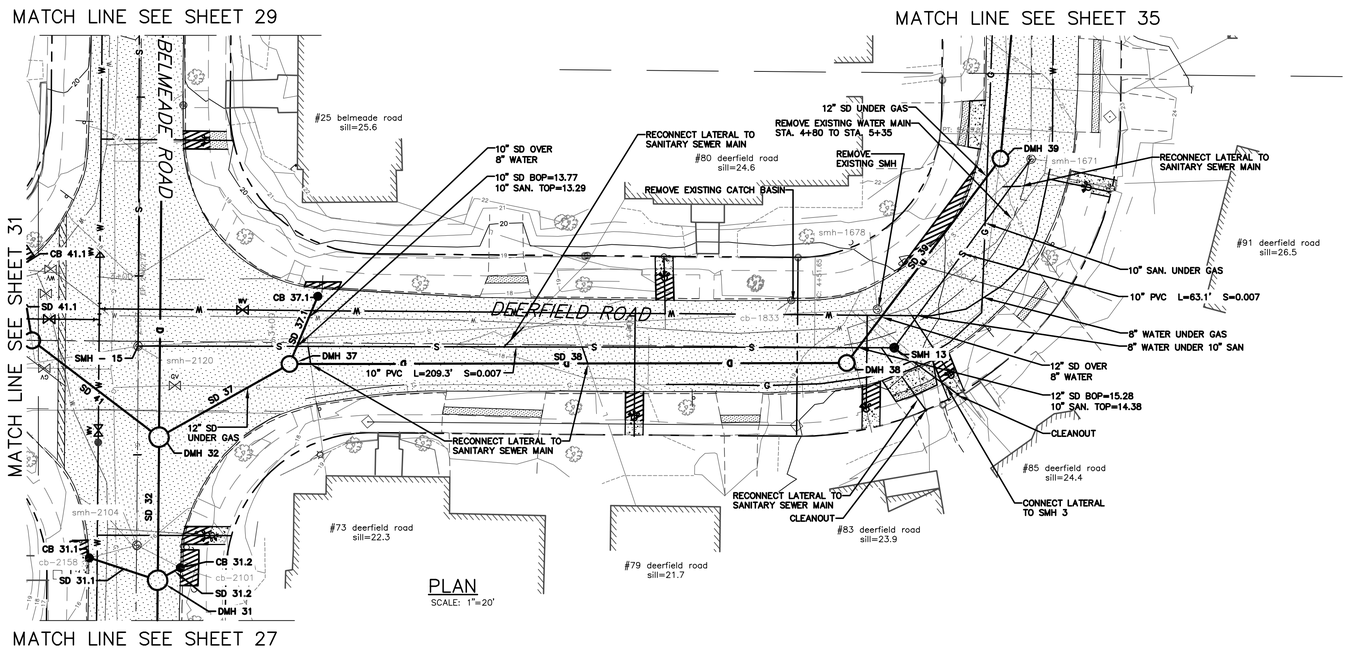


PLAN
SCALE: 1"=20'

NOTES:

1. ABANDON PIPE SHALL MEAN CUT PIPE, PLUG BOTH ENDS, AND FILL WITH FLOWABLE FILL.
2. PLUG PIPE SHALL MEAN INSTALL MASONRY PLUG OR PVC CAP.

Pipe Table

| NAME | SIZE | LENGTH | SLOPE | MATERIAL |
|---|---|---|---|---|
| SD 32 | 30" | 40.00' | 2.00% | HDPE |
| SD 37 | 12" | 41.81' | 3.13% | HDPE |
| SD 37.1 | 10" | 20.51' | 0.98% | HDPE |
| SD 38 | 12" | 155.68' | 1.12% | HDPE |
| SD 39 | 12" | 71.53' | 0.91% | HDPE |
| SD 41 | 12" | 44.60' | 0.49% | HDPE |

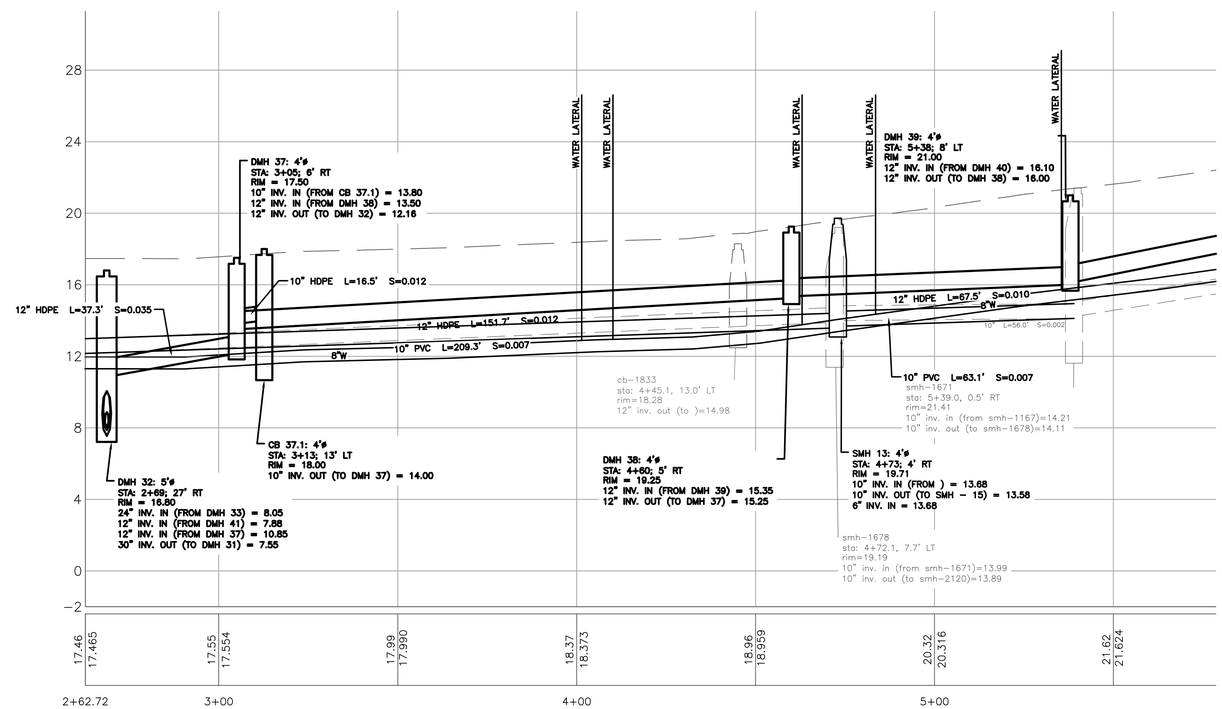


PROFILE
SCALE: HORZ. 1"=20'
VERT 1"=4'

FEBRUARY 2018

Civil 3D 2013 Drawing Name:
17112 PP DEERFIELD ROAD.dwg, TAB:DEERFIELD WEST PP1

CITY PROPERTY PLAN BOOK SHEETS:
I & I SHEETS: III-9, III-11

02/23/18 RAM ISSUE ADDENDUM #1

REFERENCES:

DESIGN BY: RLM
DRAWN BY: SAP
CHECKED BY: RAM
SCALE: 1" = 20'
DATE: 02.16.2018

STATE OF MAINE ROBERT A. McSPILLAN No. 4258 LICENSED PROFESSIONAL ENGINEER
02.23.2018

BEDFORD STREET
SEWER SEPERATION PROJECT

PLAN & PROFILE - DEERFIELD ROAD
STA. 2+62 TO STA. 5+75

CITY OF PORTLAND, MAINE
PUBLIC WORKS DEPARTMENT
WATER RESOURCES DIVISION

CITY OF PORTLAND, MAINE RESURGAM

SHEET #
33 OF 46

PLAN NUMBER

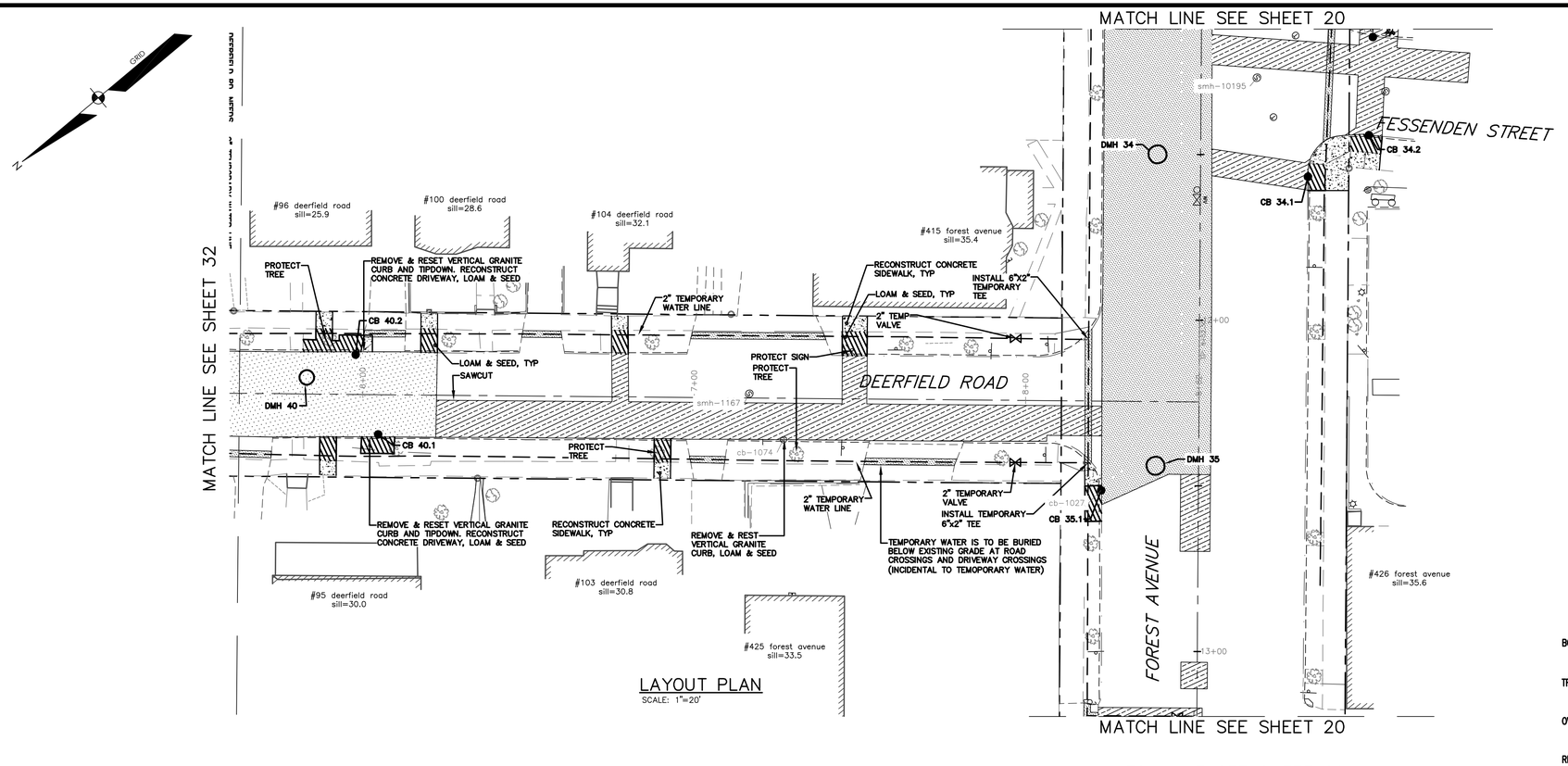


LAYOUT PLAN

SCALE: 1"=20'

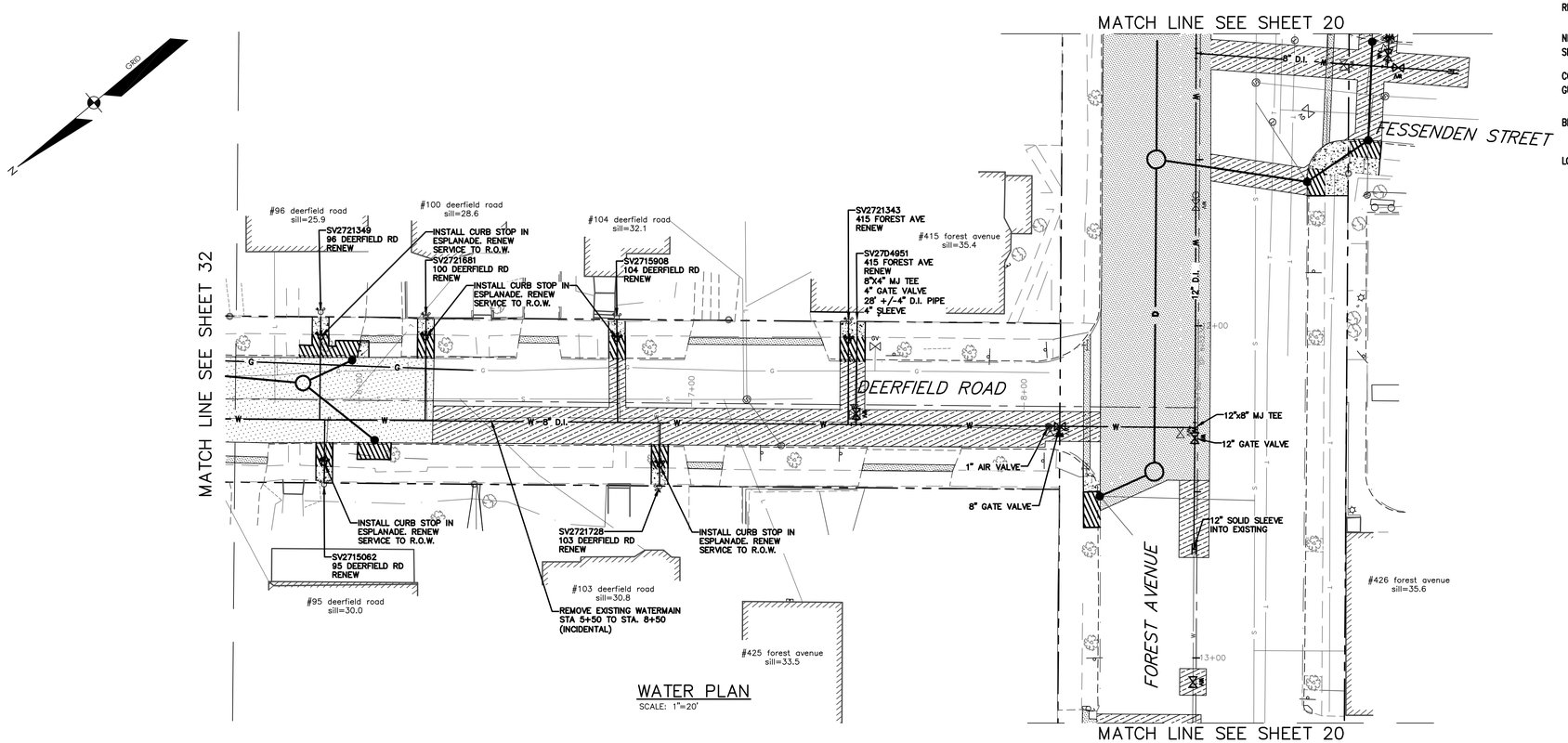


WATER PLAN

SCALE: 1"=20'

BOX CUT

TRENCH

OVERLAY

RIPRAP

NEW CONCRETE SIDEWALK

COBBLE STONE GUTTER

BIT. SIDEWALK REPAIR

LOAM & SEED

FEBRUARY 2018

REFERENCES:

Civil 3D 2013 Drawing Name:
17112 PP DEERFIELD ROAD.dwg, TAB:DEERFIELD WEST L02

CITY PROPERTY PLAN BOOK SHEETS:
I & J SHEETS: III-9, III-11

| | |
|---|---|
| DESIGN BY: | RLM |
| DRAWN BY: | SAP |
| CHECKED BY: | RAM |
| SCALE: | 1" = 20' |
| DATE: | 02. 16.2018 |

STATE OF MAINE ROBERT A. MCSPERLEY No. 8568 LICENSED PROFESSIONAL ENGINEER

BEDFORD STREET
SEWER SEPERATION PROJECT

DEERFIELD ROAD LAYOUT & WATER PLAN

CITY OF PORTLAND, MAINE
PUBLIC WORKS DEPARTMENT
WATER RESOURCES DIVISION

RESURGAM CITY OF PORTLAND, MAINE

SHEET #
34 OF 46

PLAN NUMBER

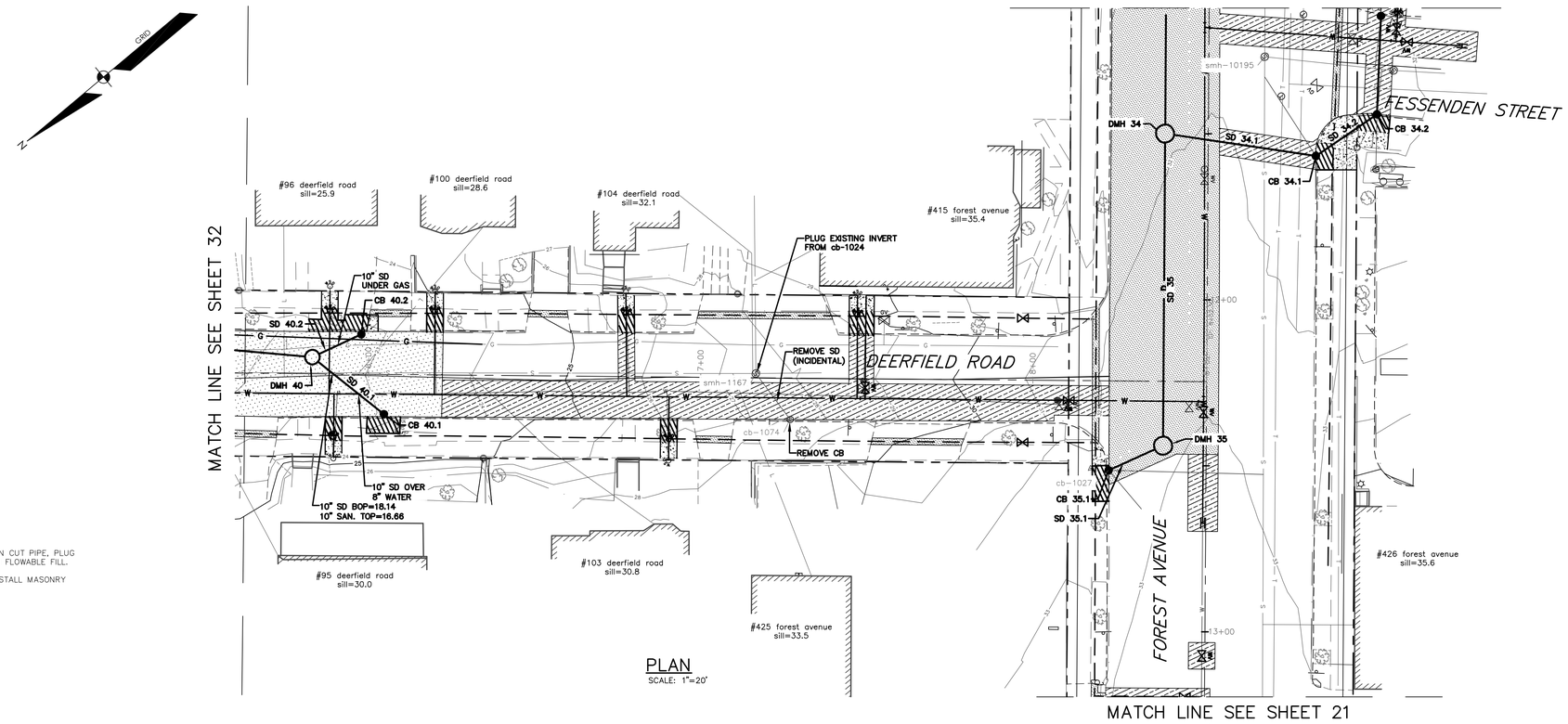


PLAN
SCALE: 1"=20'

## NOTES:

1. ABANDON PIPE SHALL MEAN CUT PIPE, PLUG BOTH ENDS, AND FILL WITH FLOWABLE FILL.
2. PLUG PIPE SHALL MEAN INSTALL MASONRY PLUG OR PVC CAP.

| Pipe Table | | | | |
|---|---|---|---|---|
| NAME | SIZE | LENGTH | SLOPE | MATERIAL |
| SD 40 | 12" | 44.10' | 4.08% | HDPE |
| SD 40.1 | 10" | 27.58' | 1.09% | HDPE |
| SD 40.2 | 10" | 16.30' | 1.23% | HDPE |

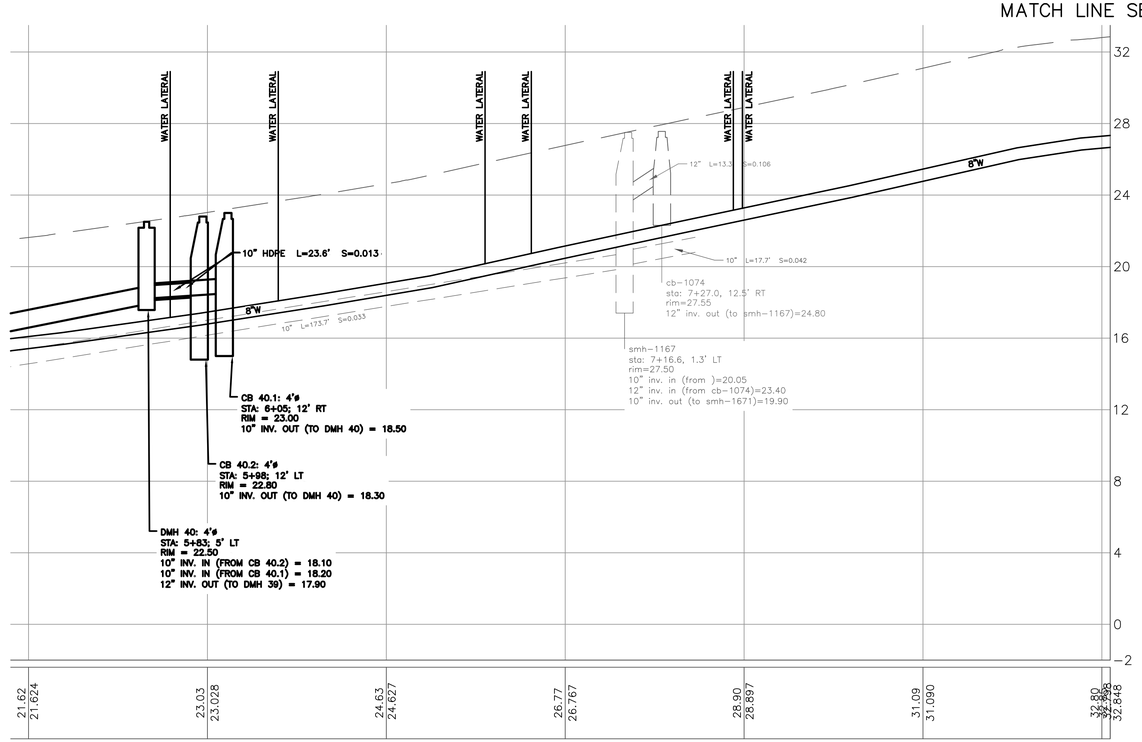


PROFILE
SCALE: HORZ. 1"=20'
VERT 1"=4'

NOTE: THAT CONTRACTOR MAY ENCOUNTER REMNANT PORTLAND RAIL COMPANY RAILROAD TRACKS TO THE EAST OF THE CENTER LINE OF FOREST AVENUE.

FEBRUARY 2018

Civil 3D 2013 Drawing Name:
17112 PP DEERFIELD ROAD.dwg, TAB:DEERFIELD WEST PP2

REFERENCES:

CITY PROPERTY PLAN BOOK SHEETS:
I & I SHEETS: III-9, III-11

| | |
|---|---|
| DESIGN BY: | RLM |
| DRAWN BY: | SAP |
| CHECKED BY: | RAM |
| SCALE: | 1" = 20' |
| DATE: | 02.16.2018 |

STATE OF MAINE
ROBERT A. McSORLEY
No. 4558
LICENSED
PROFESSIONAL ENGINEER

BEDFORD STREET
SEWER SEPERATION PROJECT

PLAN & PROFILE - DEERFIELD ROAD STA. 5+75 TO STA. 8+52.30

CITY OF PORTLAND, MAINE
PUBLIC WORKS DEPARTMENT
WATER RESOURCES DIVISION

CITY OF PORTLAND, MAINE
RESURGAM

SHEET #
35 OF 46

PLAN NUMBER

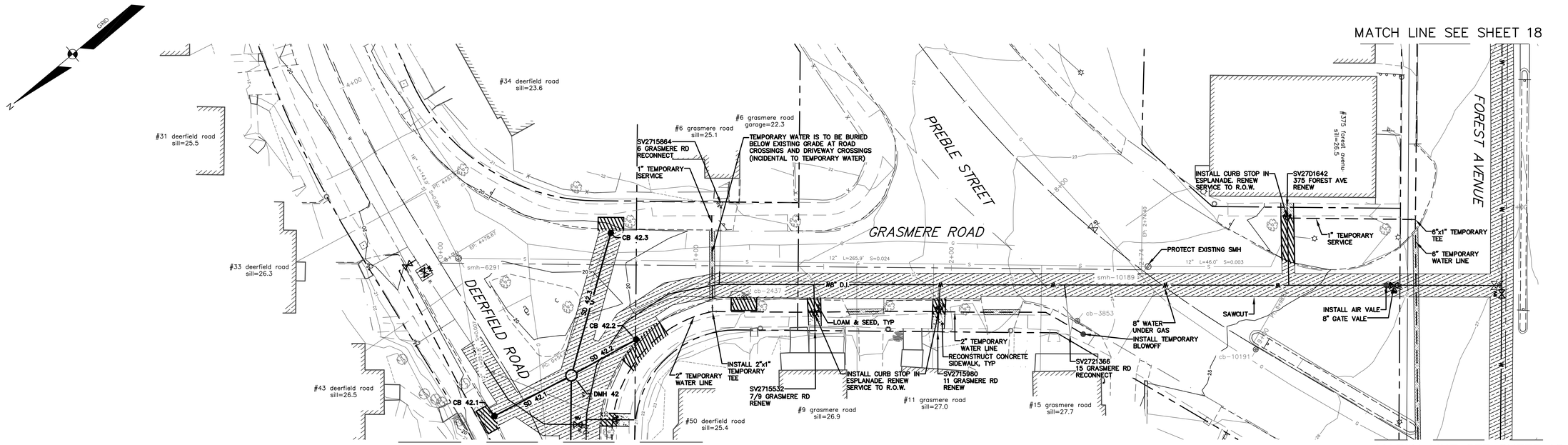


## PLAN

SCALE: 1"=20'

## NOTES:

1. ABANDON PIPE SHALL MEAN CUT PIPE, PLUG BOTH ENDS, AND FILL WITH FLOWABLE FILL.
2. PLUG PIPE SHALL MEAN INSTALL MASONRY PLUG OR PVC CAP.

| Pipe Table | | | | |
|---|---|---|---|---|
| NAME | SIZE | LENGTH | SLOPE | MATERIAL |
| SD 42.1 | 10" | 34.02' | 0.44% | HDPE |
| SD 42.3 | 10" | 57.82' | 0.48% | HDPE |
| SD 42.2 | 10" | 28.98' | 0.52% | HDPE |

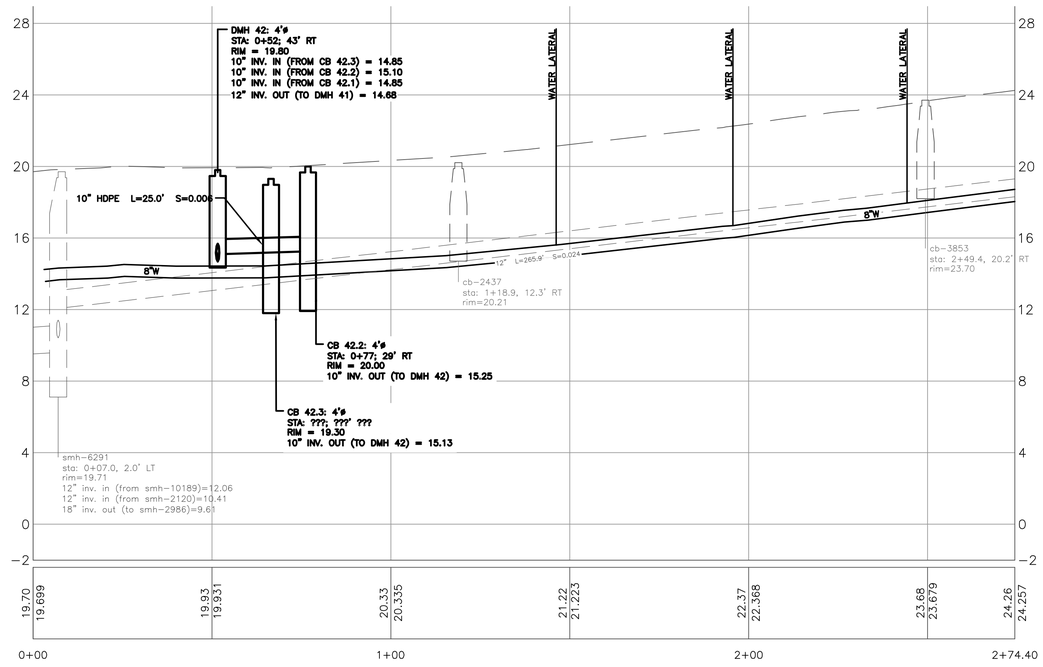


## PROFILE

SCALE: HORZ. 1"=20'
VERT 1"=4'

FEBRUARY 2018

Civil 3D 2013 Drawing Name:
17112 PP GRASMERE ROAD.dwg, TAB:GRASMERE ROAD PP1

REFERENCES:

CITY PROPERTY PLAN BOOK SHEETS:
I & J SHEETS: 1#9, 1#11

DESIGN BY: RLM
DRAWN BY: SAP
CHECKED BY: RAM
SCALE: 1" = 20'
DATE: 02. 16.2018

STATE OF MAINE
ROBERT M. SPOFFORD
No. 8569
LICENSED PROFESSIONAL ENGINEER

BEDFORD STREET
SEWER SEPERATION PROJECT

PLAN & PROFILE - GRASMERE ROAD
STA. 0+00 TO STA. 2+75

CITY OF PORTLAND, MAINE
PUBLIC WORKS DEPARTMENT
WATER RESOURCES DIVISION

CITY OF PORTLAND, MAINE
RESURGAM

SHEET #
36 OF 46

PLAN NUMBER

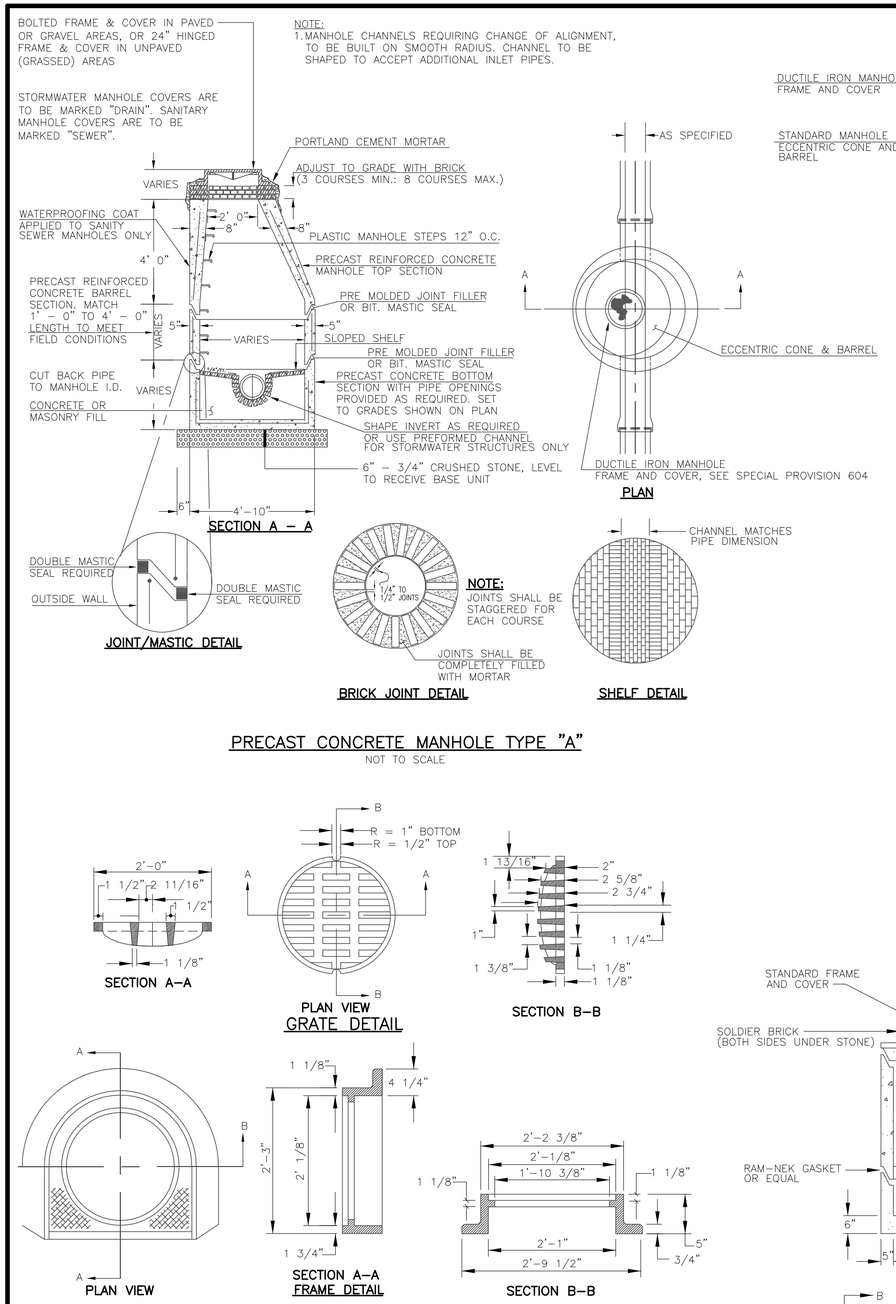


PRECAST CONCRETE MANHOLE TYPE "A"

NOT TO SCALE

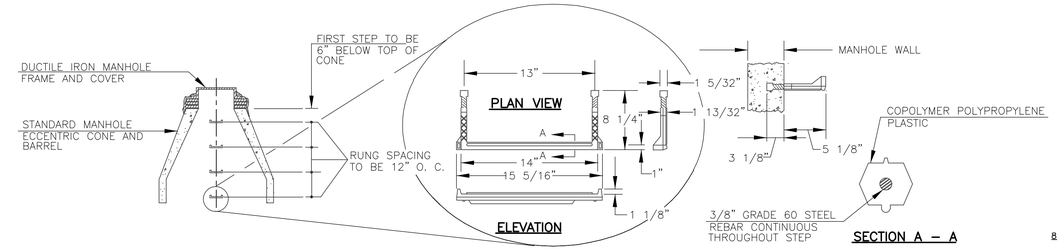


PLASTIC MANHOLE STEPS

NOT TO SCALE

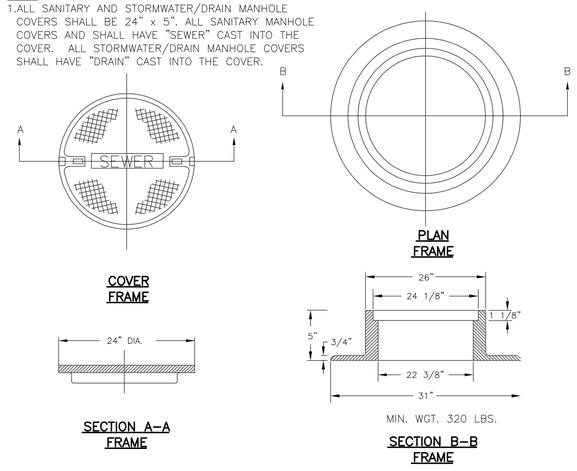


CAST IRON MANHOLE FRAME AND COVER

NOT TO SCALE

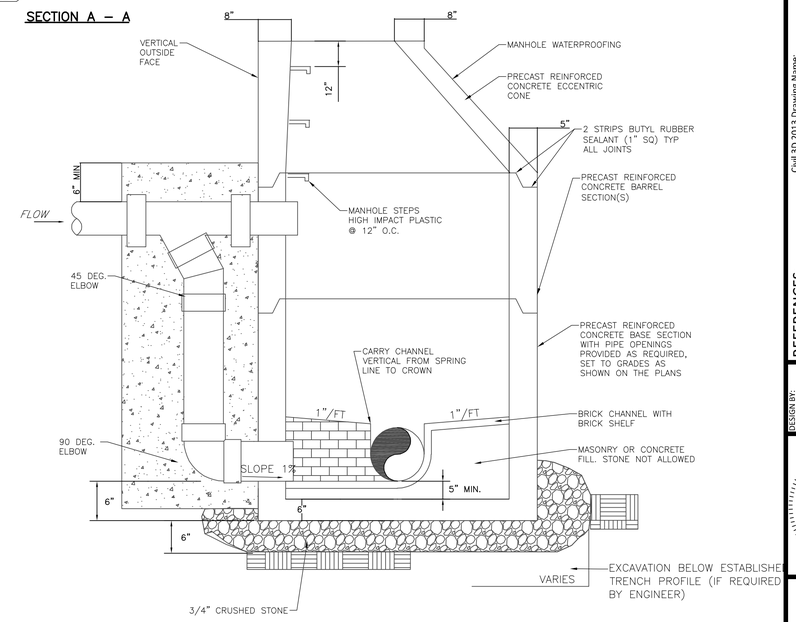


NOTES:

1. MANHOLE CHANNELS REQUIRING CHANGE IN ALIGNMENT ARE TO BE BUILT ON A SMOOTH RADIUS. IF SIDE PIPES ENTER CHANNEL, SHAPE TO RECEIVE ADDED SIDE FLOW.

2. USE FLAT SLAB TOP MANHOLE WHEN THE DIFFERENCE BETWEEN INVERT AND RIM IS LESS THAN 6'-0" AND WHEN MANHOLE DIAMETER IS GREATER THAN 4'-0".

3. ALL BACKFILL WITHIN 3 FEET OF STRUCTURE SHALL BE SELECT FILL PLACED IN 8" MAXIMUM LIFTS.

OUTSIDE DROP SANITARY MANHOLE DETAIL

N.T.S.




CATCH BASIN TYPE "D" - FRAME & COVER DETAIL

NOT TO SCALE

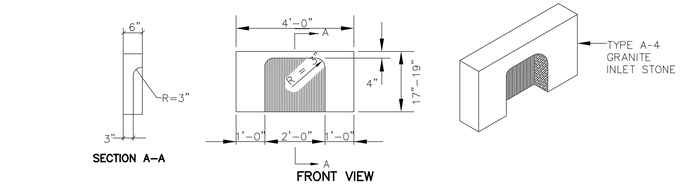


TYPE A-4 GRANITE CATCH BASIN INLET STONE DETAIL

NOT TO SCALE

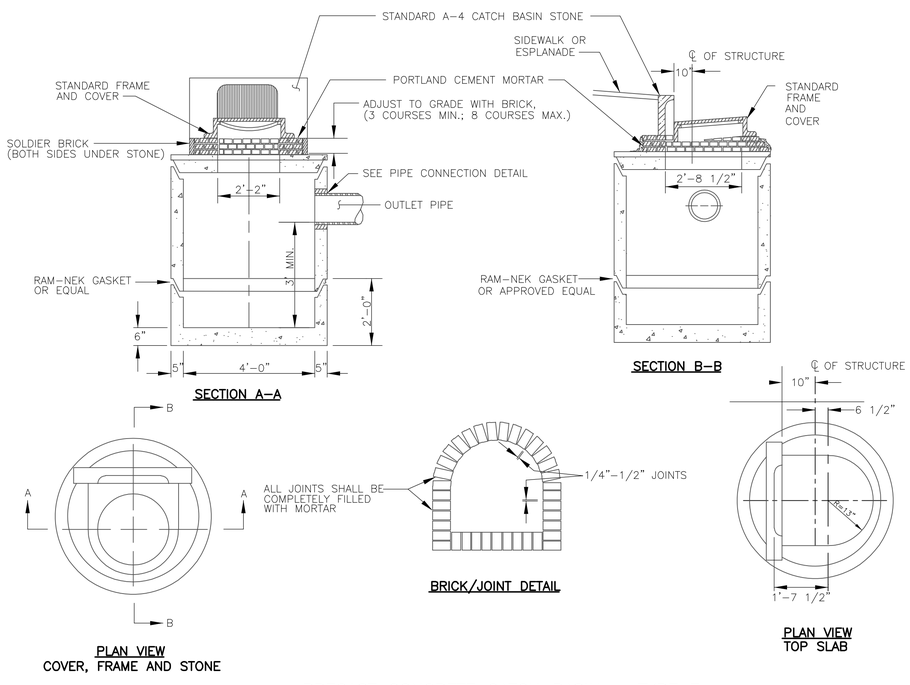


PRECAST CONCRETE CATCH BASIN - TYPE E

NOT TO SCALE

## GENERAL NOTES FOR MANHOLES & CATCH BASINS

1. ALL CONCRETE SHALL BE CLASS "A" AND HAVE A MINIMUM ULTIMATE COMPRESSIVE STRENGTH OF 4000 lbs. PER SQ. INCH AT THE END OF 28 DAYS, UNLESS OTHERWISE NOTED.
2. PRECAST REINFORCED CONE BARREL MANUFACTURED PER ASTM SPEC. C-478-67
3. SEWER BRICK SHALL CONFORM TO ASTM SPEC. DESIGNATE ON C-32-63, GRADE MA AND SA.
4. SANITARY SEWER MANHOLES SHALL HAVE A BITUMINOUS WATERPROOFING APPLIED TO THE EXTERIOR SURFACE. IF CONSTRUCTED OF BRICK MASONRY, SURFACE SHALL BE PLASTERED WITH A SMOOTH MORTAR FINISH 3/8" THICK. AFTER THE MORTAR HAS SET, THE SURFACE SHALL BE WATERPROOFED AS REQUIRED BY SUPPLEMENTAL SPECIFICATIONS SECTION 604.
5. MANHOLES MAY BE CONSTRUCTED OF MASONRY, PRECAST REINFORCED CONCRETE, OR CAST IN PLACE.
6. ALL PRECAST MANHOLES AND CATCH BASINS SHALL BE IDENTIFIED BY STATION AND OFFSET, PAINTED ON THE SIDE OF THE STRUCTURE BY THE MANUFACTURER.
7. EXISTING FRAMES, AND COVERS SHALL BE SALVAGED BY THE CONTRACTOR, AND SHALL REMAIN THE PROPERTY OF THE CITY OF PORTLAND. CONTRACTOR SHALL DELIVER TO CITY STOCKYARD AT NO COST.
8. EXISTING GRANITE COBBLE STONE AND PAVERS SHALL BE STOCKPILE BY THE CONTRACTOR, AND REUSED FOR CONSTRUCTION OF NEW COBBLE STONE GUTTER. GRANITE NOT USED SHALL REMAIN THE PROPERTY OF THE CITY OF PORTLAND.
9. ALL CATCH BASINS SHALL BE INSTALLED WITH A PLASTIC PIPE FABRICATION HOOD OR EQUIVALENT.

REFERENCES:

Civil 3D 2013 Drawing Name: 17112 D.dwg, TAB:D1

CITY PROPERTY PLAN BOOK SHEETS: I & I SHEETS: III-9, III-11

| | |
|---|---|
| DESIGN BY: | ELM |
| DRAWN BY: | SAP |
| CHECKED BY: | RAM |
| SCALE: | 1" = 20' |
| DATE: | 02.16.2018 |

STATE OF MAINE ROBERT A. MCSORLEY No. 3858 LICENSED PROFESSIONAL ENGINEER

BEDFORD STREET
SEWER SEPERATION PROJECT

STANDARD CONSTRUCTION DETAILS

CITY OF PORTLAND, MAINE
PUBLIC WORKS DEPARTMENT
WATER RESOURCES DIVISION

CITY OF PORTLAND, MAINE RESURGAM

SHEET # 37 OF 46

PLAN NUMBER

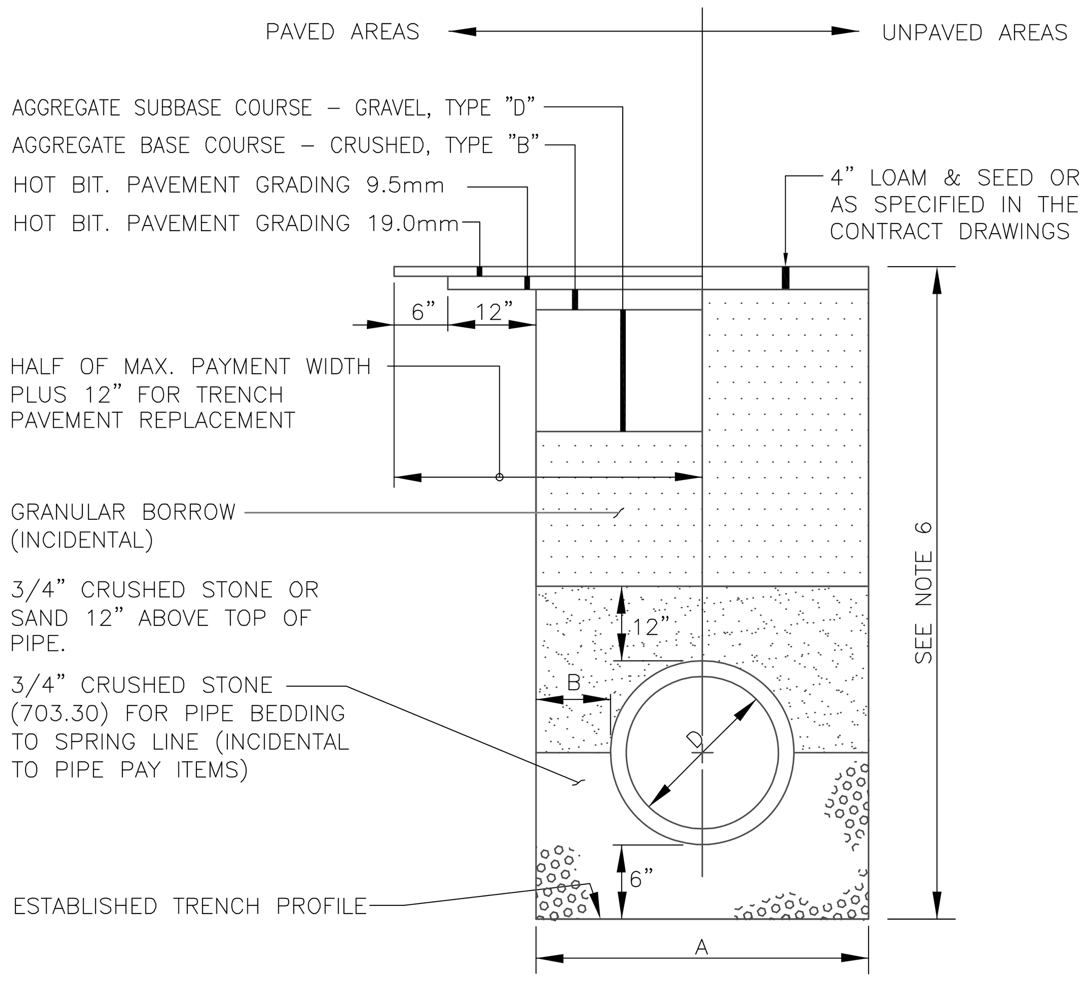


## TYPICAL PIPE INSTALLATION DETAIL

NOT TO SCALE

NOTE
WHERE COBBLE STONES AND CONCRETE BASE IS ENCOUNTERED IN THE TRENCHES OUTSIDE OF THE RE-BUILD SECTION OF FOREST AVENUE, CONTRACTOR SHALL INSTALL 12" OF CONCRETE BELOW THE PAVEMENT COURSES ON THE TRENCH

NOTES
1. ALTERNATIVE CONSTRUCTION METHODS OR PAYMENT METHODS SHALL BE APPROVED IN ADVANCE BY THE CITY.
2. IN PAVED AREAS REFER TO BITUMINOUS PAVEMENT SECTION FOR DEPTHS OF GRAVEL AND HOT MIX ASPHALT PAVEMENT BASED ON THE CORRESPONDING STREET CLASSIFICATION.
3. DIMENSION "B" SHALL BE SUFFICIENT TO ALLOW CRUSHED STONE BEDDING TO BE PLACED AND COMPACTED UNDER THE HAUNCHES OF THE PIPE; BUT IN ALL CASES "B" SHALL BE AT LEAST 9".
4. DIMENSION "A" IS THE MAXIMUM WIDTH ALLOWED FOR CALCULATING PAY QUANTITIES UNDER GRANULAR BORROW, CRUSHED STONE, STRUCTURAL EARTH EXCAVATION, AND STRUCTURAL ROCK EXCAVATION. DIMENSION "A" SHALL BE BASED ON PIPE DIAMETER "D", AS SET FORTH IN THE FOLLOWING TABLE.
5. EXCAVATION BELOW ESTABLISHED TRENCH PROFILE (IF ORDERED). PAY ITEM 206.061.
6. EXCAVATION INCIDENTAL TO PIPE PAY ITEMS (PAVED AND SEEDED AREAS)
7. DEPTH OF BITUMINOUS PAVEMENT AND AGGREGATE COURSES SHALL BE DETERMINED BY STREET CLASSIFICATION.
8. ANY ALTERNATE TRENCHING OR PAYMENT METHODS SHALL BE APPROVED IN ADVANCE BY THE CITY OF PORTLAND, DEPARTMENT OF PUBLIC SERVICES.
9. INSTALL TRENCH INSULATION WHERE SPECIFIED ON DRAWINGS OR WHERE LESS THAN 4' OF COVER IS PROVIDED.

| PIPE DIAMETER, "D" (INCHES) | MAX. TRENCH WIDTH, "A" (FEET) |
|---|---|
| 4 | 4.0 |
| 6 | 4.0 |
| 8 | 4.0 |
| 10 | 4.0 |
| 12 | 4.0 |
| 15 | 4.0 |
| 18 | 5.0 |
| 21 | 5.0 |
| 24 | 5.5 |
| 27 | 6.0 |
| 30 | 6.0 |
| 36 | 7.0 |
| 42 | 8.0 |
| 48 | 8.0 |

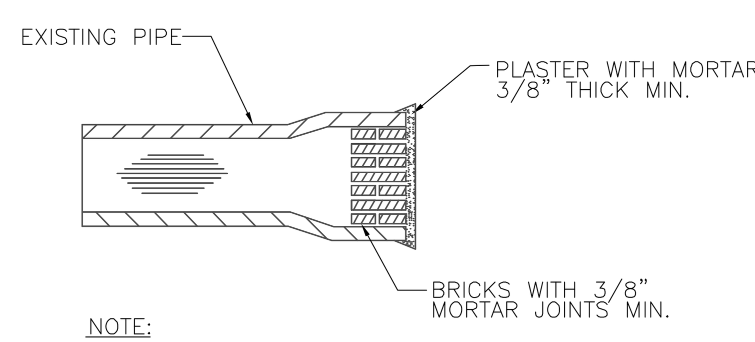


NOTE:
1. USE CAP OR PLUG FOR PVC PIPE

## MASONRY PLUG DETAIL

NOT TO SCALE

FLOW & BY-PASS SPECIFICATIONS FOR BIOMASS SEPARATING SCREEN SYSTEM, SEDIMENT COLLECTION CHAMBERS, AND SKIMMER SPECIFICATIONS

1. PIPE INFLOW AREA (DRAWN AS 30" HDPE) 4.91 SQ.FT.

SCREEN SPECIFICATIONS:

| | |
|---|---|
| 2. OPEN ORIFICE AREA IN SCREEN SYSTEM | 36.04 SQ.FT. |
| 3. OPEN ORIFICE AREA IN SCREEN SYSTEM WITH 50% BLOCKAGE | 18.02 SQ.FT. |
| 4. OPEN ORIFICE AREA IN SCREEN SYSTEM WITH 75% BLOCKAGE | 9.01 SQ.FT. |
| 5. MINIMUM BY-PASS THROUGH SCREEN SYSTEM BELOW THE CEILING OF THE PIPE | 4.13 SQ.FT. |
| 6. MINIMUM BY-PASS AROUND SCREEN SYSTEM BELOW THE CEILING OF THE PIPE | 5.20 SQ.FT. |
| 7. SCREEN SYSTEM STORAGE VOLUME | 51.23 CU.FT. |

SEDIMENT STORAGE:

| | |
|---|---|
| 8. VOLUME OF FIRST SEDIMENT CHAMBER | 76.67 CU.FT. |
| 9. VOLUME OF SECOND SEDIMENT CHAMBER | 75.00 CU.FT. |
| 10. VOLUME OF THIRD SEDIMENT CHAMBER | 75.00 CU.FT. |
| 11. TOTAL SEDIMENT VOLUME | 226.67 CU.FT. |

SKIMMER SPECIFICATIONS:

| | |
|---|---|
| 12. FLOW AREA UNDER SKIMMER | 8.75 SQ.FT. |
| 13. AREA OF PIPE IN LINE WITH SKIMMER | 2.52 SQ.FT. |
| 14. AREA BETWEEN THE SKIMMER AND THE OUTFLOW PIPE PARALLEL WITH THE SURFACE OF THE PIPE | 4.3 SQ.FT. |

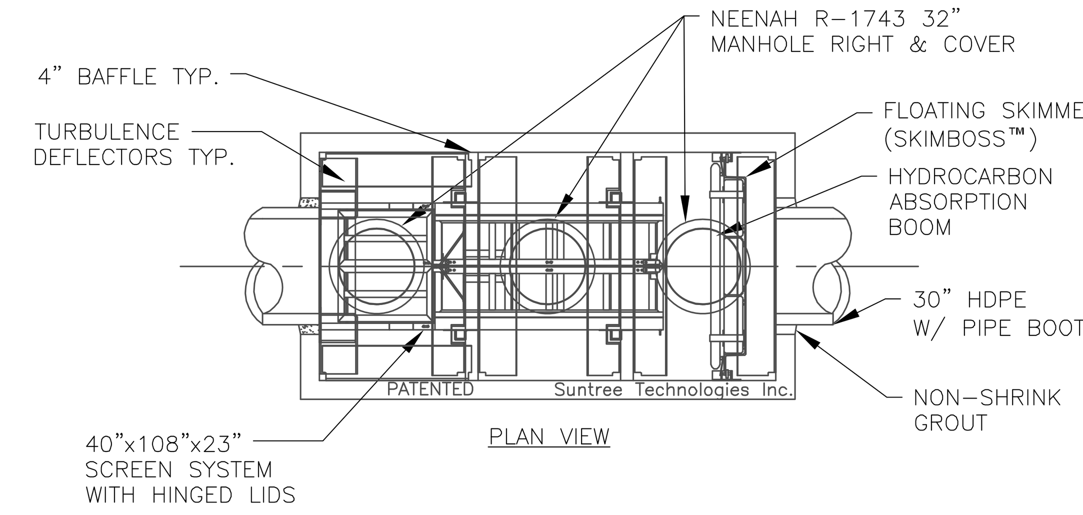


PLAN VIEW

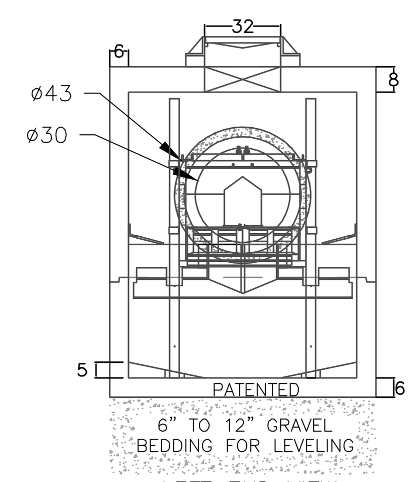


LEFT END VIEW

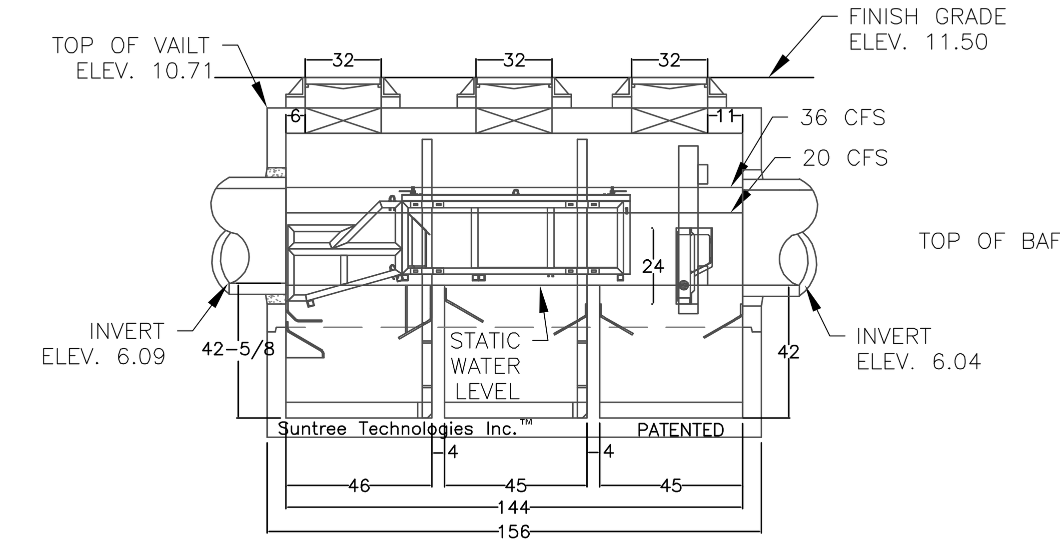


FRONT SIDE VIEW

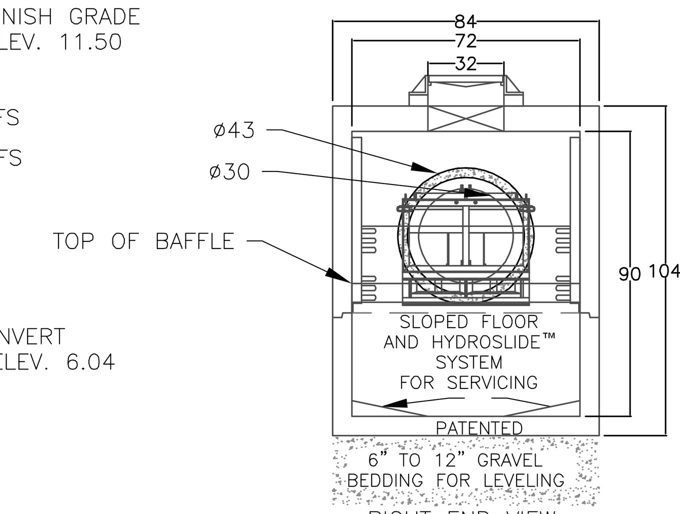


RIGHT END VIEW

NOTES:
1. CONCRETE 28 DAY COMPRESSIVE STRENGTH FC=5000 PSI
2. REINFORCING: ASTM A-615 GRADE 60
3. SUPPORTS AN H20 LOADING AS INDICATED BY AASHTO.
4. JOINT SEALANT: BUTYL RUBBER SS-S-00210
5. ALL WALLS TO BE 6" THICK, BOTTOM TO BE 6" THICK, AND TOP TO BE 8" THICK.
6. TREATMENT DESIGN FLOW FOR 80% REMOVAL EFFICIENCY OF TSS IS 24 CFS.
7. INFLOW AND OUTFLOW PIPES ARE TO BE FLUSH WITH THE INSIDE SURFACE OF THE CONCRETE STRUCTURE. (CAN NOT INTRUDE BEYOND FLUSH)
8. BAFFLES ARE TO BE SEALED WITH GROUT TO FORM 3 WATER TIGHT CHAMBERS.

## BAFFLE BOX: NSBB-6-12-90

NOT TO SCALE

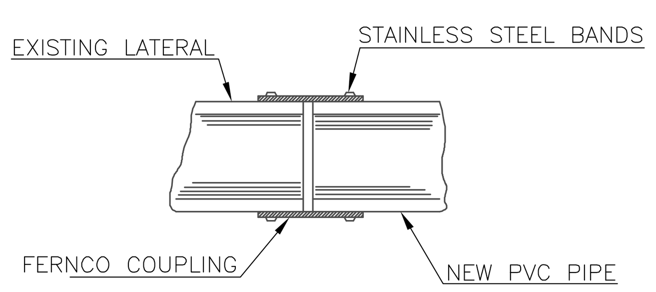


## FERNCO COUPLING FOR REPAIR OR REPLACEMENT

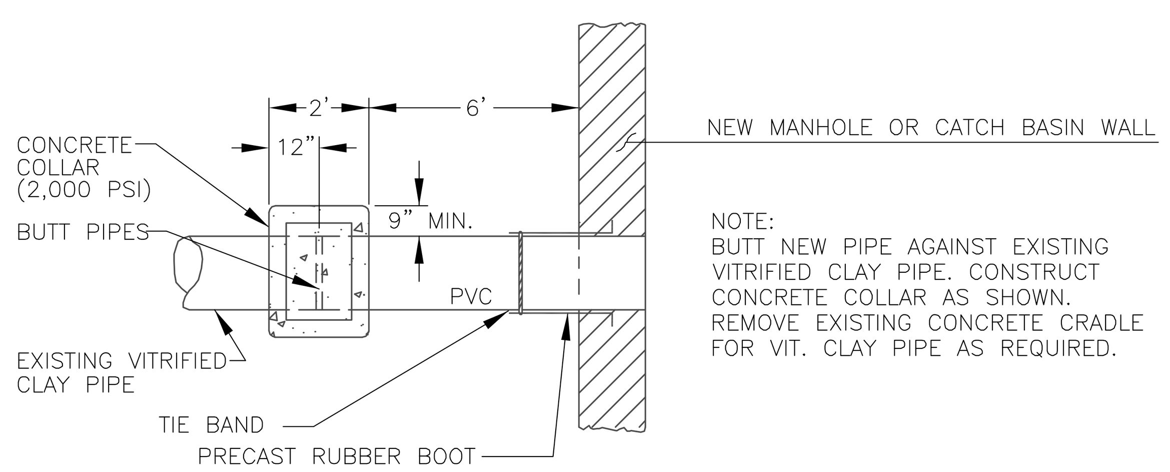


NOTE:
BUTT NEW PIPE AGAINST EXISTING VITRIFIED CLAY PIPE. CONSTRUCT CONCRETE COLLAR AS SHOWN. REMOVE EXISTING CONCRETE CRADLE FOR VIT. CLAY PIPE AS REQUIRED.

## EXISTING VITRIFIED CLAY PIPE INTO NEW STRUCTURE

NOT TO SCALE

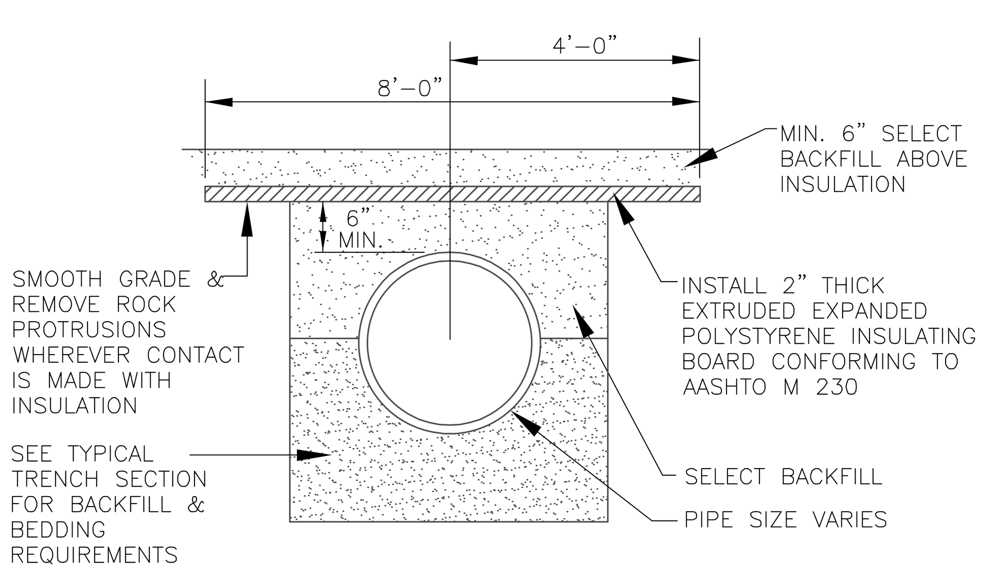


## PIPE INSULATION DETAIL

NOT TO SCALE

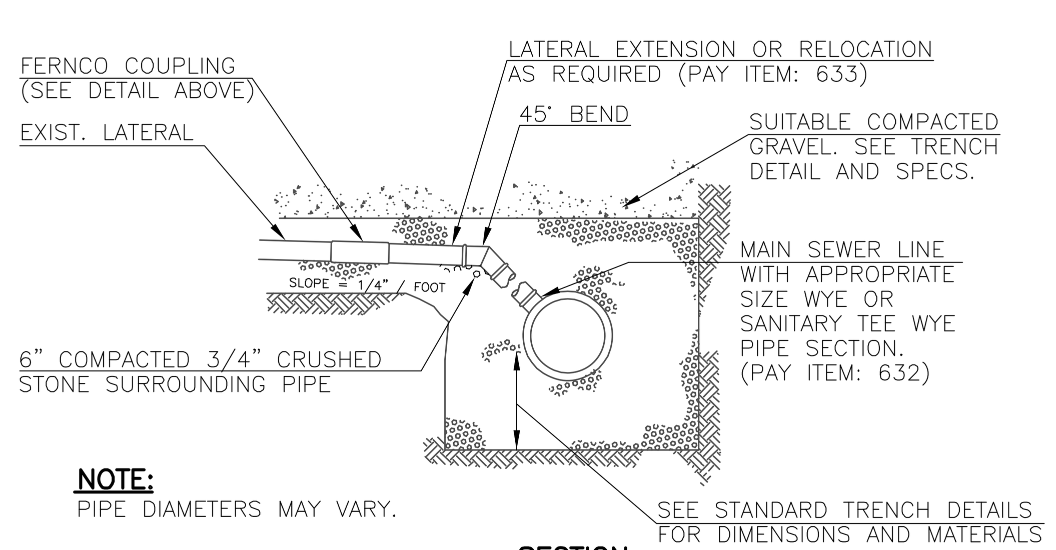


**NOTE:**
PIPE DIAMETERS MAY VARY.

**SECTION**

**NOTE:**
1. LOCATIONS AND ELEVATIONS OF STUBS SHOWN ON THE PLANS ARE TO BE CONSIDERED AS APPROXIMATE AND MAY BE ADJUSTED AS DIRECTED TO SUIT FIELD CONDITIONS.
2. HOUSE CONNECTIONS AND CATCH BASINS CONNECTIONS TO THE MAIN LINE OF THE SEWER, SHALL CONSIST OF AN APPROPRIATE "Y" BRANCH CONNECTION AS SHOWN ON THE PLANS, OR AS DIRECTED. ACTUAL "Y" LOCATIONS FOR HOUSE CONNECTIONS AND CATCH BASIN CONNECTIONS SHALL BE DETERMINED DURING CONSTRUCTION. THE CONTRACTOR SHALL KEEP A COMPLETE RECORD OF "Y" LOCATIONS WHICH SHALL BE GIVEN TO THE CITY OF PORTLAND UPON COMPLETION OF THE CONTRACT.
3. LOCATION / WARNING TAPE SHALL BE INSTALLED OVER CENTERLINE OF PIPE AT A MAXIMUM OF 24 INCHES BELOW FINISH GRADE.

## TYPICAL EXISTING SEWER LATERAL CONNECTION DETAILS

NOT TO SCALE

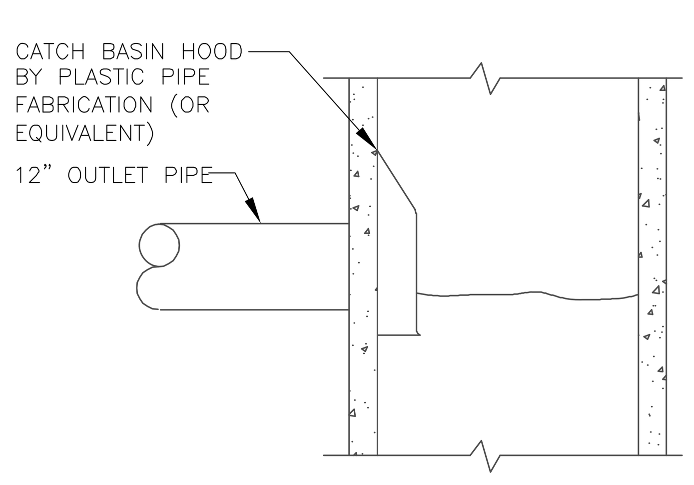


## PPF CATCH BASIN HOOD

NOT TO SCALE

FLOW & BY-PASS SPECIFICATIONS FOR BIOMASS SEPARATING SCREEN SYSTEM, SEDIMENT COLLECTION CHAMBERS, AND SKIMMER SPECIFICATIONS

1. PIPE INFLOW AREA (DRAWN AS 48" HDPE) 12.57 SQ.FT.

SCREEN SPECIFICATIONS:

| | |
|---|---|
| 2. OPEN ORIFICE AREA IN SCREEN SYSTEM | 83.37 SQ.FT. |
| 3. OPEN ORIFICE AREA IN SCREEN SYSTEM WITH 50% BLOCKAGE | 41.68 SQ.FT. |
| 4. OPEN ORIFICE AREA IN SCREEN SYSTEM WITH 75% BLOCKAGE | 20.84 SQ.FT. |
| 5. MINIMUM BY-PASS THROUGH SCREEN SYSTEM BELOW THE TOP SURFACE OF THE PIPE | 26.57 SQ.FT. |
| 6. MINIMUM BY-PASS AROUND SCREEN SYSTEM BELOW THE TOP SURFACE OF THE PIPE | 27.11 SQ.FT. |
| 7. SCREEN SYSTEM STORAGE VOLUME | 140.52 CU.FT. |

SEDIMENT STORAGE:

| | |
|---|---|
| 8. VOLUME OF FIRST SEDIMENT CHAMBER | 236.67 CU.FT. |
| 9. VOLUME OF SECOND SEDIMENT CHAMBER | 236.67 CU.FT. |
| 10. VOLUME OF THIRD SEDIMENT CHAMBER | 236.67 CU.FT. |
| 11. TOTAL SEDIMENT VOLUME | 710.00 CU.FT. |

SKIMMER SPECIFICATIONS:

| | |
|---|---|
| 12. FLOW AREA UNDER SKIMMER | 19.58 SQ.FT. |
| 13. AREA OF PIPE IN LINE WITH SKIMMER | 11.95 SQ.FT. |
| 14. AREA BETWEEN THE SKIMMER AND THE OUTFLOW PIPE PARALLEL WITH THE SURFACE OF THE PIPE | 34.01 SQ.FT. |

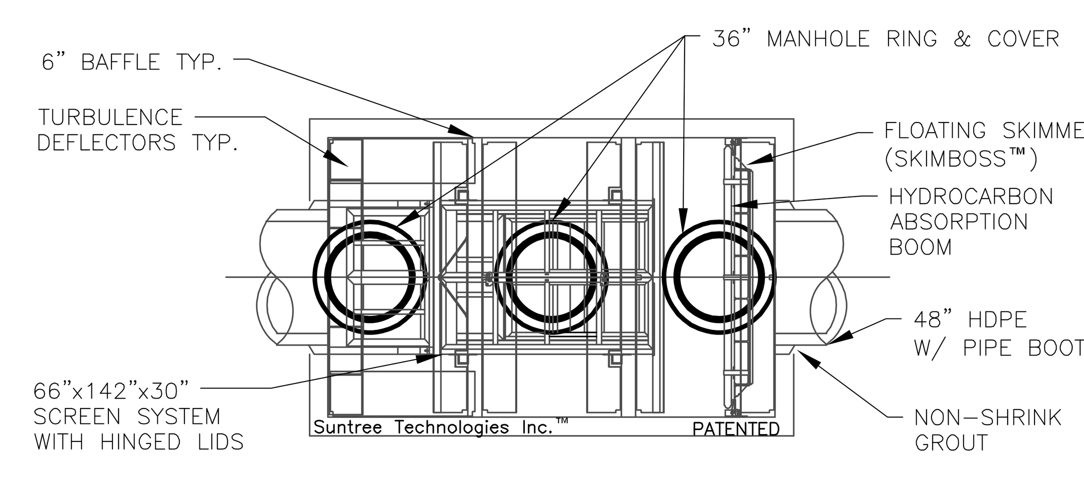


PLAN VIEW

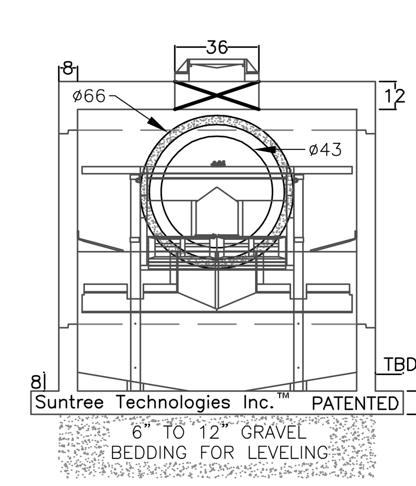


LEFT END VIEW

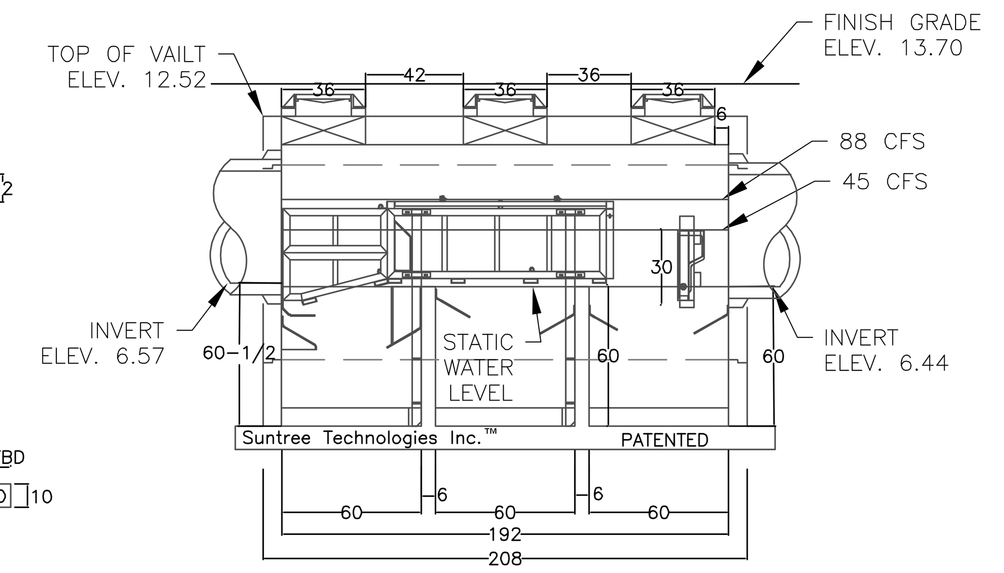


FRONT SIDE VIEW

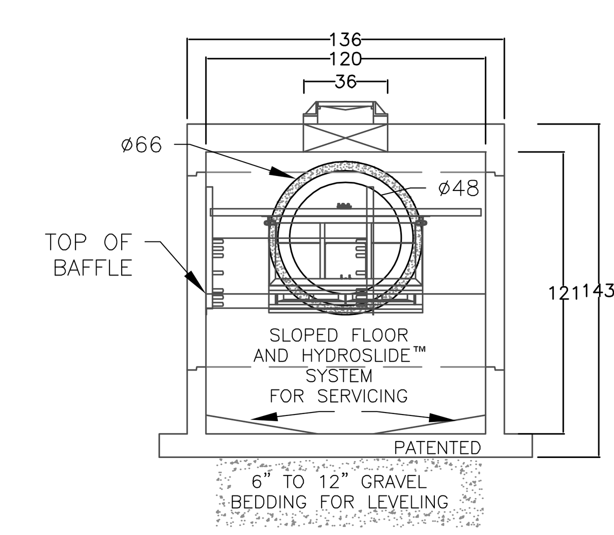


RIGHT END VIEW

NOTES:
1. CONCRETE 28 DAY COMPRESSIVE STRENGTH FC=5000 PSI
2. REINFORCING: ASTM A-615 GRADE 60
3. SUPPORTS AN H20 LOADING AS INDICATED BY AASHTO.
4. JOINT SEALANT: BUTYL RUBBER SS-S-00210
5. ALL WALLS TO BE 8" THICK, BOTTOM TO BE 10" THICK, AND TOP TO BE 12" THICK.
6. TREATMENT DESIGN FLOW FOR 80% REMOVAL EFFICIENCY OF TSS IS 50 CFS.
7. INFLOW AND OUTFLOW PIPES ARE TO BE FLUSH WITH THE INSIDE SURFACE OF THE CONCRETE STRUCTURE. (CAN NOT INTRUDE BEYOND FLUSH)
8. BAFFLES ARE TO BE SEALED WITH GROUT TO FORM 3 WATER TIGHT CHAMBERS.

## BAFFLE BOX: NSBB-10-16-121

NOT TO SCALE

1 02/23/18 RAM ISSUE ADDENDUM #1

REFERENCES:

Civil 3D 2013 Drawing Name:
17112 D.dwg, TAB:D2

CITY PROPERTY PLAN BOOK SHEETS:
I & I SHEETS: III-9, III-II

| DESIGN BY: | DRAWN BY: | CHECKED BY: | SCALE: | DATE: |
|---|---|---|---|---|
| RLM | SAP | RAM | 1" = 20' | 02. 16.2018 |

STATE OF MAINE ROBERT A. McSORLEY No. 8588 LICENSED PROFESSIONAL ENGINEER
02. 23.2018

BEDFORD STREET
SEWER SEPERATION PROJECT
STANDARD CONSTRUCTION DETAILS

CITY OF PORTLAND, MAINE
PUBLIC WORKS DEPARTMENT
WATER RESOURCES DIVISION

SHEET #
38 OF 46

PLAN NUMBER

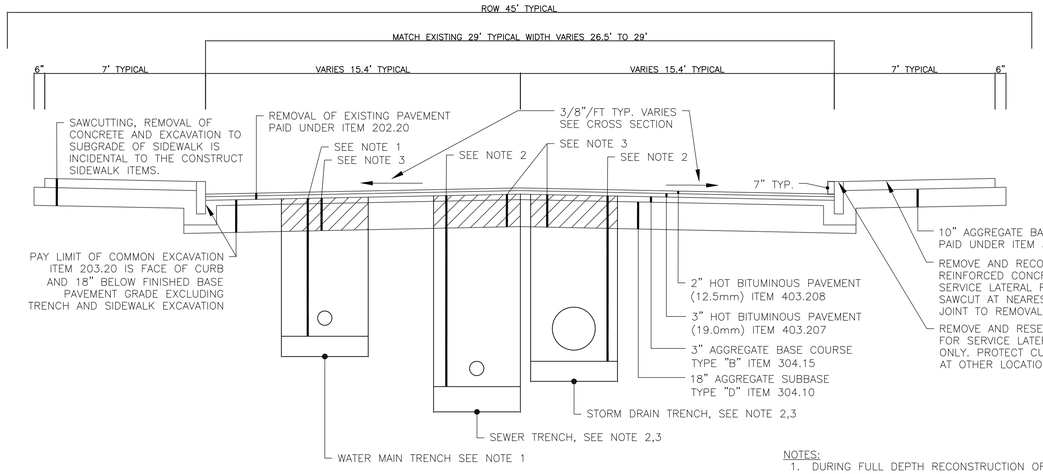


## TYPICAL ROADWAY SECTION – BEDFORD STREET

NOT TO SCALE

NOTES:
1. DURING FULL DEPTH RECONSTRUCTION OF BEDFORD STREET CONTRACTOR SHALL REMOVE ALL MATERIALS DOWN TO DEPTH OF SUBBASE.
2. CONTRACTOR SHALL LEAVE 6"–9" OF EXISTING MATERIAL IN FROM OF CURB, UNLESS DIRECTED OTHERWISE BY RESIDENT ENGINEER, TO STABILIZE EXISTING CURB.
3. WHERE BEDROCK IS ENCOUNTERED, CONTRACTOR SHALL EXCAVATE TO BEDROCK ELEVATIONS AND SCARIFY BEDROCK AS NEEDED TO INSTALL AT LEAST THE 3" BASE MATERIAL.

NOTES:
1. TRENCH EXCAVATION AND BACKFILL FOR WATERMAIN IS INCIDENTAL TO THE PIPE AND SEPARATE PAYMENT WILL NOT BE MADE. BASE AND SUBBASE GRAVEL WITHIN WATERMAIN TRENCH SHALL BE INCIDENTAL TO PIPE INSTALLATION.
2. TRENCH EXCAVATION FOR SEWER AND STORM DRAIN IS INCIDENTAL TO THE PIPE AND SEPARATE PAYMENT WILL NOT BE MADE FOR TRENCH EXCAVATION WITHIN THE TRENCH PAY LIMITS.
3. BASE GRAVEL WITHIN STORM DRAIN AND SANITARY SEWER TRENCH PAY LIMITS SHALL BE PAID AS ITEM 304.15 SUBBASE GRAVEL WITHIN STORM DRAIN AND SANITARY SEWER TRENCH PAY LIMITS SHALL BE PAID AS ITEM 304.10. BASE AND SUBBASE GRAVEL FOR WATERMAIN SHALL BE PAID AS A PLAN QUANTITY UNDER THE WATER DISTRICT PAY ITEMS.

### RECOMMENDED MINIMUM PLACEMENT TEMPERATURES FOR PAVEMENT

| BASE[1] TEMPERATURE °F | MAT THICKNESS, IN INCHES | | | | | |
|---|---|---|---|---|---|---|
| | 1/2 | 3/4 | 1 | 1 1/2 | 2 | 3 |
| +40 – 50 | – | – | 310 | 300 | 285 | 275 |
| +50 – 60 | – | 310 | 300 | 295 | 280 | 270 |
| +60 – 70 | 310 | 300 | 290 | 285 | 275 | 265 |
| +70 – 80 | 300 | 290 | 285 | 280 | 270 | 265 |
| +80 – 90 | 290 | 280 | 275 | 270 | 265 | 260 |
| +90 | 280 | 275 | 270 | 265 | 260 | 255 |
| ROLLING TIME MIN. | 4 | 6 | 8 | 12 | 15 | 15 |

[1] BASE ON WHICH MIX IS PLACED.
[2] AND GREATER

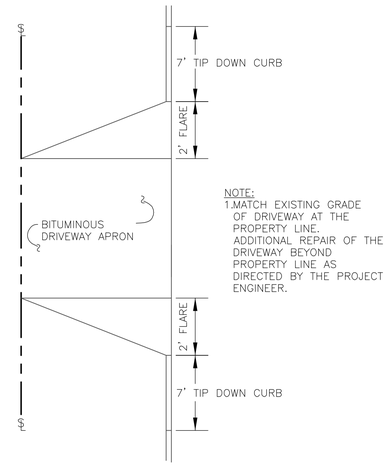


NOTE:
1.MATCH EXISTING GRADE OF DRIVEWAY AT THE PROPERTY LINE. ADDITIONAL REPAIR OF THE DRIVEWAY BEYOND PROPERTY LINE AS DIRECTED BY THE PROJECT ENGINEER.

PLAN VIEW

## TYPICAL DRIVEWAY APRON LAYOUT

NOT TO SCALE

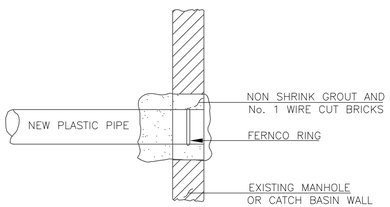


METHOD 3 – NEW PIPE INTO EXISTING STRUCTURE

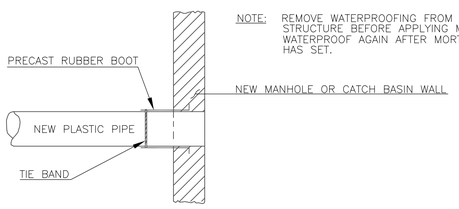


NOTE: REMOVE WATERPROOFING FROM STRUCTURE BEFORE APPLYING MORTAR. WATERPROOF AGAIN AFTER MORTAR HAS SET.

METHOD 2 – NEW CONSTRUCTION

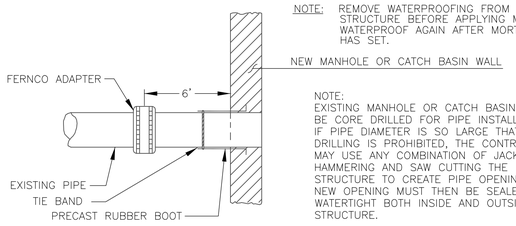


NOTE: REMOVE WATERPROOFING FROM STRUCTURE BEFORE APPLYING MORTAR. WATERPROOF AGAIN AFTER MORTAR HAS SET.

NOTE:
EXISTING MANHOLE OR CATCH BASIN SHALL BE CORE DRILLED FOR PIPE INSTALLATION. IF PIPE DIAMETER IS SO LARGE THAT CORE DRILLING IS PROHIBITED, THE CONTRACTOR MAY USE ANY COMBINATION OF JACK HAMMERING AND SAW CUTTING THE STRUCTURE TO CREATE PIPE OPENING. THE NEW OPENING MUST THEN BE SEALED AND WATERTIGHT BOTH INSIDE AND OUTSIDE THE STRUCTURE.

METHOD 1 – EXISTING PIPE INTO NEW STRUCTURE

## PLASTIC PIPE CONNECTION DETAIL

NOT TO SCALE

NOTE
LOCATION / WARNING TAPE SHALL BE INSTALLED OVER CENTERLINE OF PIPE AT A MAXIMUM OF 24 INCHES BELOW FINISH GRADE.

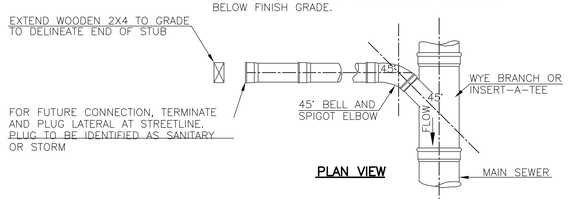


PLAN VIEW

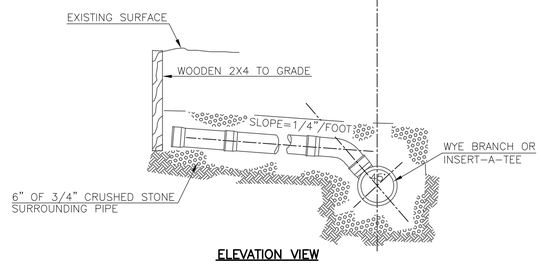


ELEVATION VIEW

NOTE:
1.LOCATIONS AND ELEVATIONS OF STUBS SHOWN ON THE PLANS ARE TO BE CONSIDERED AS APPROXIMATE AND MAY BE ADJUSTED AS DIRECTED TO SUIT FIELD CONDITIONS.

2.HOUSE CONNECTIONS AND CATCH BASINS CONNECTIONS TO THE MAIN LINE OF THE STORM DRAIN, SHALL CONSIST OF AN APPROPRIATE "Y" BRANCH OR INSERT–A–TEE CONNECTION AS SHOWN ON THE PLANS, OR AS DIRECTED. ACTUAL CONNECTION LOCATIONS FOR HOUSE SERVICES AND CATCH BASIN CONNECTIONS SHALL BE DETERMINED DURING CONSTRUCTION. THE CONTRACTOR SHALL KEEP A COMPLETE RECORD OF THESE LOCATIONS WHICH SHALL BE GIVEN TO THE CITY OF PORTLAND UPON COMPLETION OF THE CONTRACT.

## TYPICAL EXISTING STORM DRAIN LATERAL CONNECTION DETAILS

NOT TO SCALE

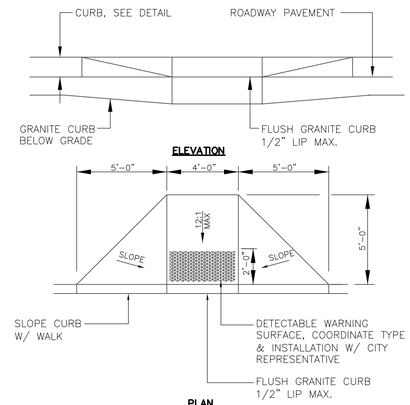


NOTE:
1.INSTALL CONCRETE PEDESTRIAN RAMP WITH 10" MINIMUM AGGREGATE BASE COURSE, GRAVEL – TYPE "B".

2. CAST IN PLACE CONCRETE SHALL MEET SPECIFICATIONS FOR MDOT CLASS A STRUCTURAL CONCRETE, MINIMUM COMPRESSIVE STRENGTH 4,000 PSI. THE CONCRETE SHALL BE SEALED PRIOR TO SETTING PANELS. THE EXPOSED CONCRETE BORDER SHALL RECEIVE A GROOVED EDGE BETWEEN THE TILE AND CONCRETE, ALONG WITH A UNIFORM BROOM FINISH PERPENDICULAR TO THE FLOW OF PEDESTRIAN TRAFFIC.

## CONCRETE PEDESTRIAN RAMP @ CROSSWALK

NOT TO SCALE

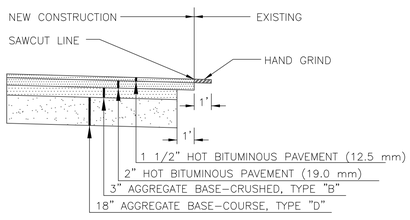


## PAVEMENT BUTT JOINT (LOCAL STREET)

NOT TO SCALE

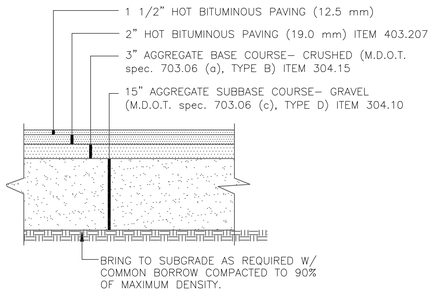


NOTES:
1.COMPACT GRAVEL SUBBASE, BASE COURSE TO 92% OF MAXIMUM DENSITY USING HEAVY ROLLER COMPACTION.

2.CONTRACTOR SHALL SET GRADE STAKES MARKING SUBBASE AND FINISH GRADE ELEVATIONS FOR CONSTRUCTION REFERENCE.

3.FOR THE OVERLAY SECTIONS OF DEERFIELD ROAD AND BELMEADE ROAD, CONTRACTOR SHALL TEMPORARILY PAVE TO EXISTING ROADWAY SURFACE WITH BASE PAVEMENT. AFTER ALL INSTALLATIONS ARE COMPLETE, CONTRACTOR SHALL MILL AND OVERLAY WITH 1–1/2" OF SURFACE PAVEMENT (12.5mm)

## TYPICAL ROADWAY AREA SECTION (LOCAL STREET)

NOT TO SCALE

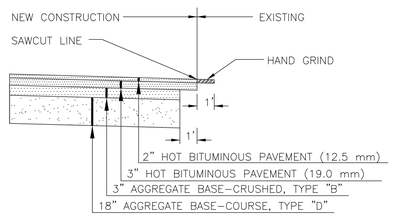


## PAVEMENT BUTT JOINT (ARTERIAL STREET)

NOT TO SCALE

03/07/18 RAM ISSUE ADDENDUM #2

REFERENCES:

Civil 3D 2013 Drawing Name: 17112 D.dwg, TAB:D3

CITY PROPERTY PLAN BOOK SHEETS: 1 & 3 SHEETS: 11-9, 11-11

| | |
|---|---|
| DESIGN BY: | RLM |
| DRAWN BY: | AAP |
| CHECKED BY: | RAM |
| SCALE: | 1" = 20' |
| DATE: | 02.16.2018 |

STATE OF MAINE ROBERT A. MOSCARELLA JR. No. 8058 PROFESSIONAL ENGINEER 03.07.2018

BEDFORD STREET SEWER SEPERATION PROJECT

STANDARD CONSTRUCTION DETAILS

CITY OF PORTLAND, MAINE
PUBLIC WORKS DEPARTMENT
WATER RESOURCES DIVISION

RESURGAM CITY OF PORTLAND, MAINE

SHEET # 39 OF 46

PLAN NUMBER

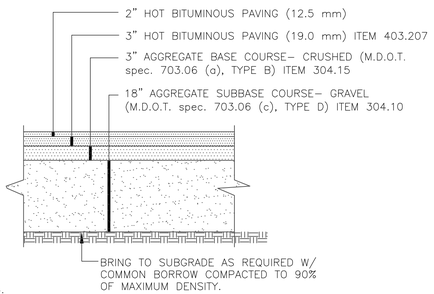


NOTES:
1. COMPACT GRAVEL SUBBASE, BASE COURSE TO 92% OF MAXIMUM DENSITY USING HEAVY ROLLER COMPACTION.
2. CONTRACTOR SHALL SET GRADE STAKES MARKING SUBBASE AND FINISH GRADE ELEVATIONS FOR CONSTRUCTION REFERENCE.
3. FOR THE OVERLAY SECTION OF BAXTER BOULEVARD, CONTRACTOR SHALL TEMPORARILY PAVE TO EXISTING ROADWAY SURFACE WITH BASE PAVEMENT. AFTER ALL INSTALLATIONS ARE COMPLETE, CONTRACTOR SHALL MILL AND OVERLAY WITH 1-1/2" OF SURFACE PAVEMENT (12.5mm).

## BAXTER BOULEVARD, DURHAM STREET & BEDFORD STREET SECTION

NOT TO SCALE

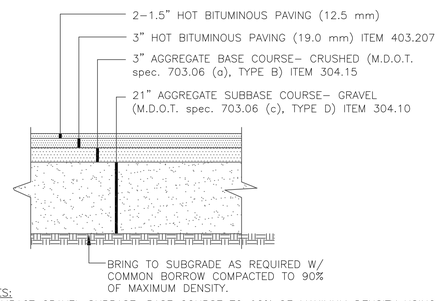


NOTES:
1. COMPACT GRAVEL SUBBASE, BASE COURSE TO 92% OF MAXIMUM DENSITY USING HEAVY ROLLER COMPACTION.
2. CONTRACTOR SHALL SET GRADE STAKES MARKING SUBBASE AND FINISH GRADE ELEVATIONS FOR CONSTRUCTION REFERENCE.
3. FOR THE OVERLAY SECTION FOR THE INTERSECTION OF FOREST AVENUE WITH BAXTER BOULEVARD AND BEDFORD STREET, CONTRACTOR SHALL TEMPORARILY PAVE TO EXISTING ROADWAY SURFACE WITH BASE PAVEMENT. AFTER ALL INSTALLATIONS ARE COMPLETE, CONTRACTOR SHALL MILL AND OVERLAY WITH 1-1/2" OF SURFACE PAVEMENT (12.5mm).

## FOREST AVENUE SECTION

NOT TO SCALE

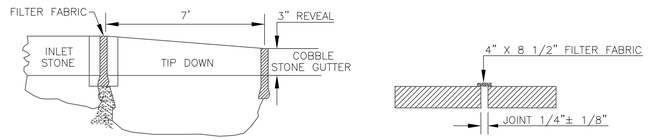


## 7' TIP DOWN INSTALLATION – INLET TO COBBLE STONE GUTTER

NOT TO SCALE

**NOTE:**
REFER TO CONTRACT FOR MORE DETAIL MATERIAL SPECIFICATIONS.

**CONCRETE SPECIFICATION:**
- 4000 p.s.i.
- 3/4" AGGREGATE
- 6 – 7 % AIR ENTRAINMENT
- SLUMP – 4" ± 1"

**CONTROL JOINT SPECIFICATION:**
- SPACING OF JOINTS
  - 10 FEET ON CENTER ALONG LENGTH
  - 6 FEET ON CENTER ALONG WIDTH
- SAW CUT JOINTS AT 1 1/2" MAX. DEPTH

**FINISH SPECIFICATION:**
- BROOM SWEPT FINISH
- CURE WITH CURE-TO-SPEC MS
- AFTER CONSTRUCTION JOINTS HAVE BEEN FILLED AND SEALED; APPLY "CONSOLIDECK SALTGUARD"

**NOTE:**
ALL CONCRETE SHALL BE PLACED BY AN A.C.I. FLATWORK CERTIFIED FINISHER

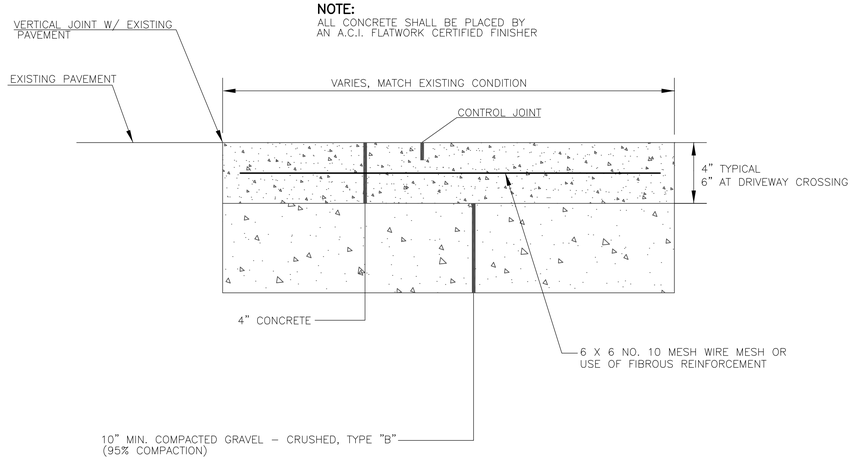


## REINFORCED CONCRETE SIDEWALK

NOT TO SCALE

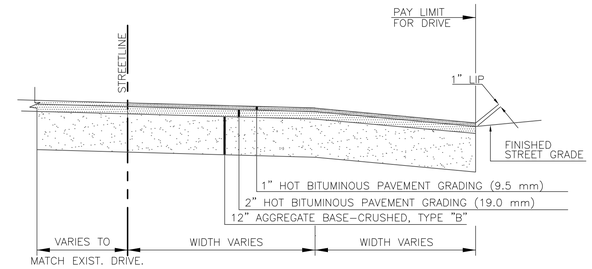


## BITUMINOUS DRIVEWAY SECTION

NOT TO SCALE

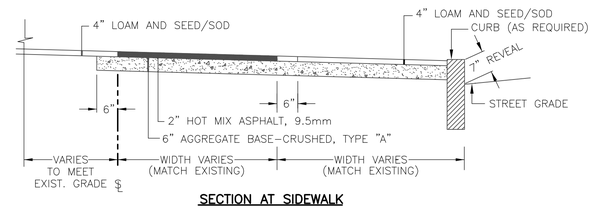


**SECTION AT SIDEWALK**

## BITUMINOUS SIDEWALK WITH ESPLANADE

NOT TO SCALE

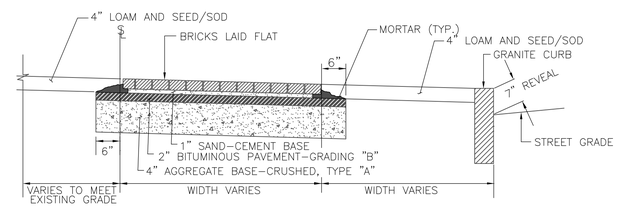


**SECTION**

## BRICK SIDEWALK DETAIL

NOT TO SCALE

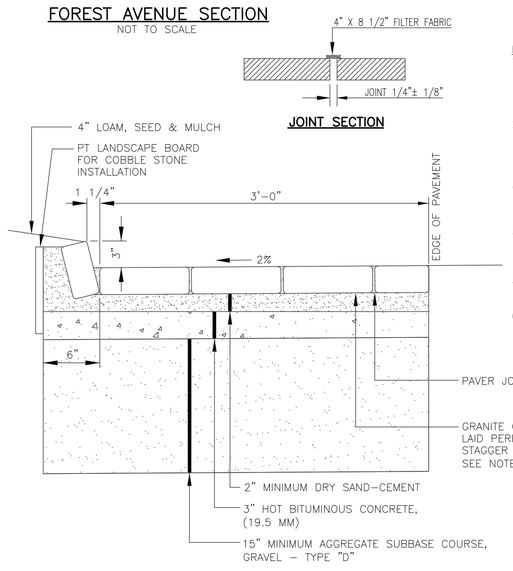


**JOINT SECTION**

NOTES:
1. DRY SAND-CEMENT MIX SHALL BE: SIX (6) PARTS OF WASHED MORTAR SAND TO ONE (1) PART PORTLAND CEMENT.
2. DRY SAND-CEMENT SHALL BE PLACED AND SWEPT INTO THE JOINTS TO WITHIN 1/4" TO 1/2" OF PAVER SURFACE.
3. ALL SURPLUS SAND-CEMENT SHALL BE SWEPT FROM THE GRANITE PAVER SURFACE.
4. A FINAL APPLICATION OF SAND ONLY SHALL BE SPREAD ON THE GRANITE PAVER SURFACE.
5. REUSE EXISTING GRANITE PAVERS TO GREATEST EXTENT POSSIBLE.
6. COBBLESTONE CURB AND GUTTER INSTALLATION IS INCIDENTAL TO PIPE PAY ITEMS.

## COBBLESTONE GUTTER DETAIL

NOT TO SCALE

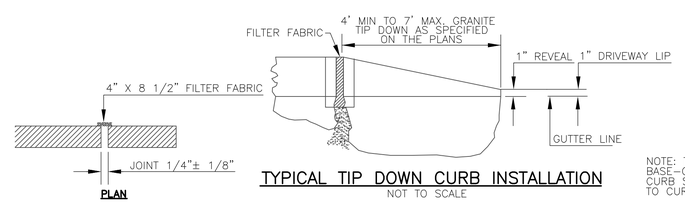


**PLAN**

## TYPICAL TIP DOWN CURB INSTALLATION

NOT TO SCALE

NOTE: THE EXCAVATION AND AGGREGATE BASE-CRUSHED GRAVEL FOR BEDDING THE CURB SHALL BE CONSIDERED INCIDENTAL TO CURB ITEMS.

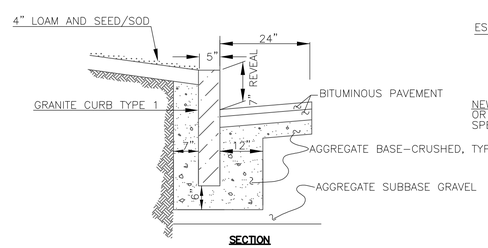


**SECTION**

## INSTALLATION OF CURB

NOT TO SCALE

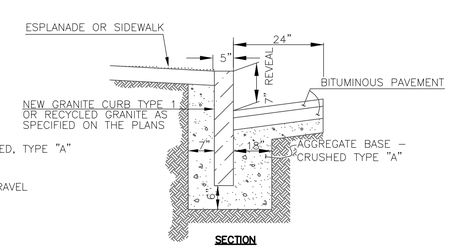


**SECTION**

## CURB REPLACEMENT DETAIL

NOT TO SCALE

## TYPICAL INSTALLATION OF CURB

NOT TO SCALE

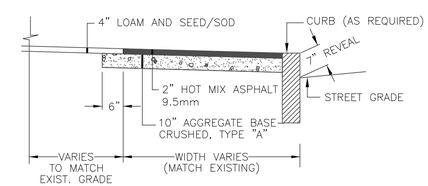


**SECTION**

## BITUMINOUS SIDEWALK DETAIL – NO ESPLANADE

NOT TO SCALE

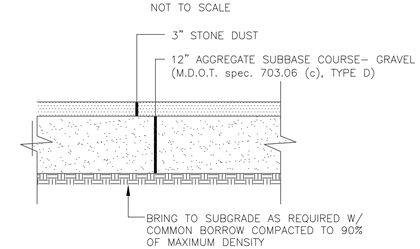


NOTES:
1. COMPACT_GRAVEL SUBBASE, BASE COURSE TO 92% OF MAXIMUM DENSITY USING HEAVY ROLLER COMPACTION.
2. MATCH EXISTING TRAIL WIDTH.

## TYPICAL TRAIL SECTION

NOT TO SCALE

03/07/18 RAM ISSUE ADDENDUM #2

REFERENCES:

Civil 3D 2013 Drawing Name: 17112 D.dwg, TAB:D4

CITY PROPERTY PLAN BOOK SHEETS: I & I SHEETS: III-9, III-H

| | |
|---|---|
| DESIGN BY: | RLM |
| DRAWN BY: | SAP |
| CHECKED BY: | RAM |
| SCALE: | 1" = 20' |
| DATE: | 02.16.2018 |

STATE OF MAINE ROBERT A. MCSORLEY No. 8569 LICENSED PROFESSIONAL ENGINEER 03.07.2018

BEDFORD STREET SEWER SEPERATION PROJECT

STANDARD CONSTRUCTION DETAILS

CITY OF PORTLAND, MAINE
PUBLIC WORKS DEPARTMENT
WATER RESOURCES DIVISION

CITY OF PORTLAND, MAINE – RESURGAM

SHEET # 40 OF 46

PLAN NUMBER

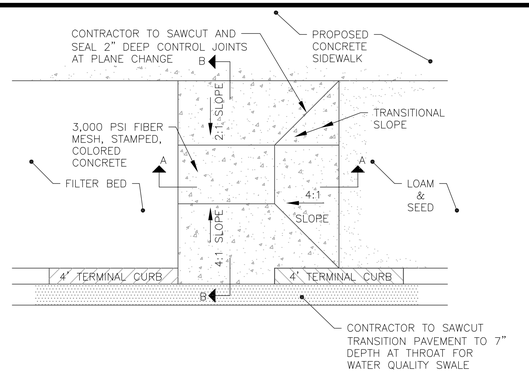


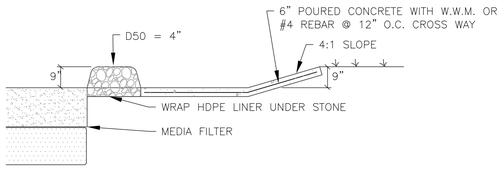


## FOREBAY DETAIL

NOT TO SCALE

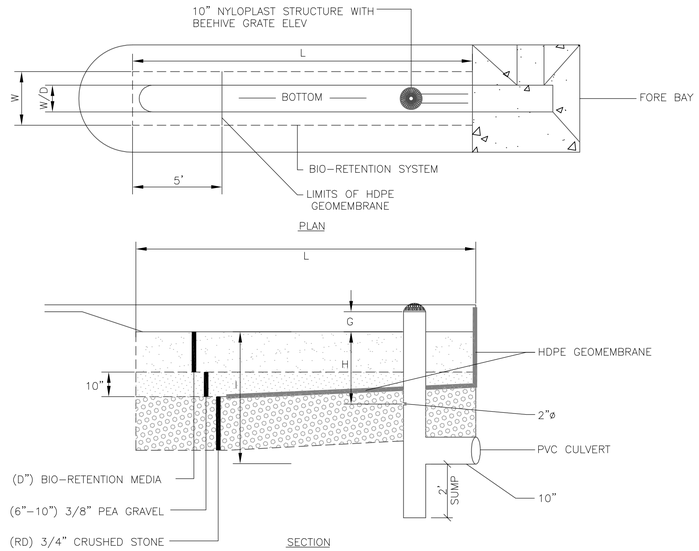


## TREATMENT POND DETAIL

NOT TO SCALE

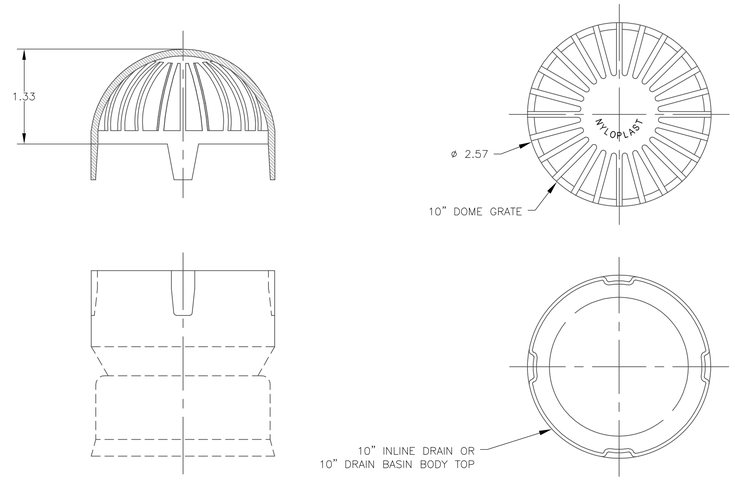


## 10" NYLOPLAST GRATE ASSEMBLY

NOT TO SCALE

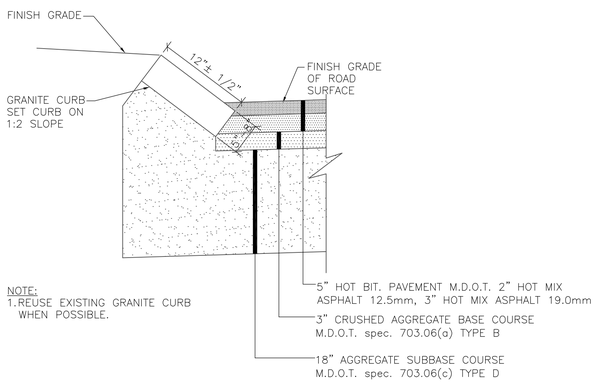


## TYPE 5 GRANITE CURB SECTION

NOT TO SCALE

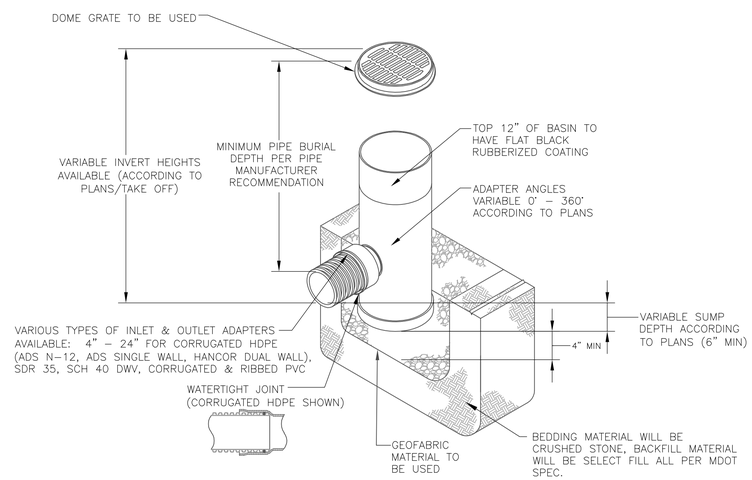


## NYLOPLAST DRAIN BASIN

NOT TO SCALE

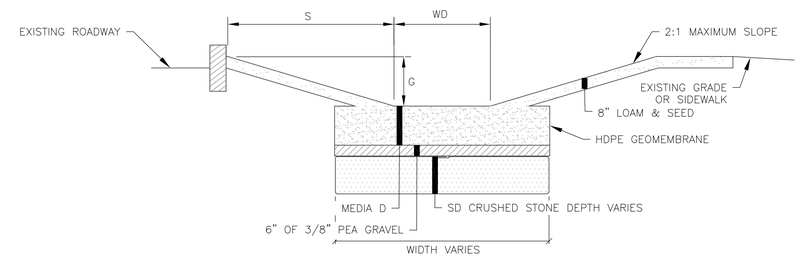


## TYPICAL BIORETENTION SYSTEM DETAIL

NOT TO SCALE

| TREATMENT SWALE | (G, FROM EDGE OF PAVEMENT) | DEPTH TO BLEEDER HOLE (H) | DEPTH TO INVERT (I) | SLOPE FROM CURB (S) | DEPTH OF MEDIA (D) | DEPTH OF CRUSH STONE (SD) | WIDTH OF POND (WD) | WIDTH OF MEDIA FILTER (W) | LENGTH OF SWALE (L) |
|---|---|---|---|---|---|---|---|---|---|
| WQS-1 | 6'' | 24'' | 43'' | 2' | 12'' | 15'' | 1.5' | 3.0' | 25 |
| WQS-2 | 6'' | 24'' | 43'' | 2' | 12'' | 15'' | 1.5' | 3.0' | 25 |
| WQS-3 | 6'' | 24'' | 43'' | 2' | 12'' | 15'' | 1.5' | 3.0' | 25 |
| WQS-4 | 9'' | 30'' | 58'' | 3' | 18'' | 24'' | 2.0' | 4.0' | 30 |
| WQS-5 | 12'' | 30'' | 58'' | 4' | 18'' | 24'' | 4.0' | 5.0' | 30 |
| WQS-6 | 12'' | 30'' | 58'' | 4' | 18'' | 24'' | 3.0' | 4.0' | 25 |

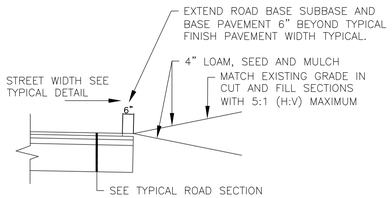


## TYPICAL EDGE TREATMENT FOR UN-CURBED STREET

NOT TO SCALE

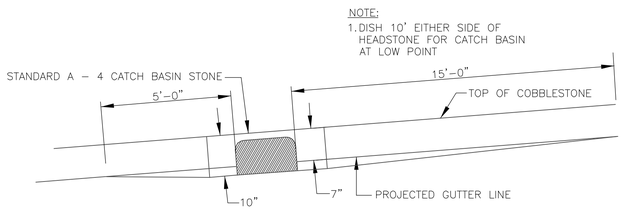


## TYPICAL PAVEMENT GRADING ON SLOPES FOR CATCH BASIN & INLET

NOT TO SCALE

## CONSTRUCTION NOTES FOR UNDERDRAINED SOIL FILTERS & BIORETENTION FILTERS:

1. THE SOIL FILTER MEDIA AND VEGETATION MUST NOT BE INSTALLED UNTIL THE AREA THAT DRAINS TO THE FILTER HAS BEEN PERMANENTLY STABILIZED WITH PAVEMENT OR OTHER STRUCTURE, 90% VEGETATION COVER, OTHER PERMANENT STABILIZATION OR PROTECTION FROM SEDIMENT ACCUMULATING IN THE TREATMENT AREA,. OTHERWISE, THE RUNOFF FROM THE CONTRIBUTING AREA MUST BE DIVERTED AROUND THE FILTER UNTIL STABILIZATION IS COMPLETED.

2. INSPECTION OF THE FILTER BASIN SHALL BE PROVIDED FOR EACH PHASE OF CONSTRUCTION BY THE DESIGN ENGINEER OR OWNER REPRESENTATIVE. AT A MINIMUM, THE DESIGN ENGINEER SHALL INSPECT THE CONSTRUCTION AT THE FOLLOWING PHASES:
   A. AFTER PRELIMINARY CONSTRUCTION OF THE FILTER GRADES AND ONCE THE UNDERDRAIN PIPES ARE INSTALLED BUT NOT BACKFILLED.
   B. AFTER THE DRAINAGE LAYER IS CONSTRUCTED AND PRIOR TO THE INSTALLATION OF THE FILTER MEDIA.
   C. AFTER THE FILTER MEDIA HAS BEEN INSTALLED AND SEEDED.
   D. AFTER ONE YEAR TO INSPECT HEALTH OF THE VEGETATION AND MAKE CORRECTIONS.
   E. ALL MATERIAL USED FOR THE CONSTRUCTION OF THE FILTER BASIN SHALL BE APPROVED BY THE DESIGN ENGINEER AFTER TESTS BY A CERTIFIED LABORATORY SHOW THAT THEY ARE PASSING DEP SPECIFICATIONS.

3. SOIL MIX COMPONENTS SHALL BE BLENDED MIXED THOROUGHLY AND UNIFORMLY IN BATCHES NOT TO EXCEED 20 CUBIC YARDS OR AT THE DISCRETION OF THE SUPERVISING ENGINEER.

4. COMPACTION OF THE SOIL BED MATERIAL SHALL BE AVOIDED. IF COMPACTION OCCURS, ROTOTILL AGAIN PRIOR TO SEEDING OR SODDING.

5. THE CONTRACTOR SHALL IDENTIFY THE LOCATION OF THE SOURCE OF EACH COMPONENT OF THE FILTER MEDIA. ALL RESULTS OF THE FIELD AND LABORATORY TESTING SHALL BE SUBMITTED TO THE DESIGN ENGINEER FOR CONFIRMATION. THE CONTRACTOR SHALL
   A. SUBMIT SAMPLES OF EACH TYPE OF MATERIAL TO BE BLENDED FOR THE MIXED FILTER MEDIA AND SAMPLES OF THE UNDERDRAIN BEDDING MATERIAL. SAMPLES MUST BE A COMPOSITE OF THREE GRABS FROM THE STOCKPILE OR PIT FACE. SAMPLE SIZE REQUIRED WILL BE DETERMINED BY THE TESTING LABORATORY.
   B. PERFORM A SIEVE ANALYSIS CONFORMING TO ASTM C136 (STANDARD TEST METHOD FOR SIEVE ANALYSIS OF FINE AND COARSE AGGREGATES, 1996A) ON EACH TYPE OF THE SAMPLE MATERIAL. THE RESULTING SOIL FILTER MEDIA MIXTURE MUST HAVE 8% TO 12% BY WEIGHT PASSING THE #200 SIEVE, A CLAY CONTENT OF LESS THAN 2% (DETERMINED BY HYDROMETER GRAIN SIZE ANALYSIS) AND HAVE 10% DRY WEIGHT OF ORGANIC MATTER.
   C. PERFORM A PERMEABILITY TEST ON THE SOIL FILTER MEDIA CONFORMING TO ASTM D2434 WITH THE MIXTURE COMPACTED TO 90-92% OF MAXIMUM DRY DENSITY BASED ON ASTM D698.
   D. BIORETENTION MEDIA LOAM AND PROCESSED WATER TREATMENT RESIDUALS SHALL BE SUBMITTED FOR APPROVAL FOR THE FOLLOWING TESTS: BASIC COMPOST TEST, SOIL QUALITY ANALYSIS PACKAGE, NUTRIENT MANAGEMENT/GRID SAMPLE PACKAGE WITH MEHLICH-3 EXTRACTION.

UNDERDRAINED & BIORETENTION MEDIA FILTER NOTES:

1. THE UNDERDRAINED SOIL MEDIA SHALL CONSIST OF A SILTY SAND SOIL OR SOIL MIXTURE COMBINED WITH 20% TO 25% BY VOLUME OF A MODERATELY FINE SHREDDED BARK OR WOOD FIBER MULCH. THE RESULTING MIXTURE MUST HAVE NO LESS THAN 8% PASSING THE 200 SIEVE AND SHALL HAVE A CLAY CONTENT OF LESS THAN 2%. THE SAND USED IN THE MIXTURE SHALL MEET THE FOLLOWING SPECIFICATIONS:
   SIEVE 3/8" – 100 PERCENT PASSING
   SIEVE #4 – 95–100 PERCENT PASSING
   SIEVE #8 – 80–100 PERCENT PASSING
   SIEVE #16 – 50–85 PERCENT PASSING
   SIEVE #30 – 25–60 PERCENT PASSING
   SIEVE #60 – 10–30 PERCENT PASSING
   SIEVE #100 – 2–10 PERCENT PASSING
   SIEVE #200 – 0–5 PERCENT PASSING

2. THE BIORETENTION MEDIA SHALL MEET THE FOLLOWING SPECIFICATIONS:

| MATERIAL | BSM SPECIFICATION |
|---|---|
| %SAND | 50 |
| %DOUBLE SHREDDED WOOD CHIPS | 20 |
| % PROCESSED WATER TREATMENT RESIDUALS | 5–10 |
| % LOAMY TOPSOIL | 10–15 |
| CEC (MEQ/100 G) | ≥5 |
| TOTAL PHOSPHORUS (MG/KG) | LESS THAN 100 A |
| PH | 5.5–7.5 |
| ORGANIC MATTER (% DRYWEIGHT) | LESS THAN 10% |
| INFILTRATION RATE (IN./HR) | GREATER THAN 4 |
| OXALATE RATIO | 20–40 |

3. THE PEA GRAVEL FOR THE BIORETENTION AREAS SHALL MEET THE FOLLOWING SPECIFICATIONS:
   SIEVE 1/2" – 100 PERCENT PASSING
   SIEVE 3/8" –85–100 PERCENT PASSING
   SIEVE #4 –10–30 PERCENT PASSING
   SIEVE #8 – 0–10 PERCENT PASSING
   SIEVE #16 – 0–15 PERCENT PASSING

PLANTING NOTES:

1. THE BOTTOM OF THE WATER QUALITY SWALES SHALL BE PLANTED WITH MISCANTHUS SINENSIS 'GRACILLIMUS'. TWO FOOT WIDE AND SWALES SHALL BE PLATED WITH ONE ROW AT 3 FOOT ON CENTER; THREE AND FOUR FOOT WIDE SWALES BE PLANTED WITH TWO ROWS ARE 3 FOOT ON CENTER.

2. CONTRACTOR SHALL INSTALL 3 INCHES OF LOAM IN BOTTOM OF SWALE AND SEED SLOPES WITH EROSION CONTROL BLANKETS.

REFERENCES:

Civil 3D 2013 Drawing Name: 17112 D.dwg, TAB:D5

CITY PROPERTY PLAN BOOK SHEETS: I & I SHEETS: III-9, III-11

| | |
|---|---|
| DESIGN BY: RLM | DATE: 02.16.2018 |
| DRAWN BY: SAP | |
| CHECKED BY: RAM | |
| SCALE: 1" = 20' | |

STATE OF MAINE ROBERT A. MCSORLEY No. 6569 PROFESSIONAL ENGINEER

BEDFORD STREET SEWER SEPERATION PROJECT

STANDARD CONSTRUCTION DETAILS

CITY OF PORTLAND, MAINE
PUBLIC WORKS DEPARTMENT
WATER RESOURCES DIVISION

RESURGAM CITY OF PORTLAND, MAINE

SHEET # 41 OF 46

PLAN NUMBER

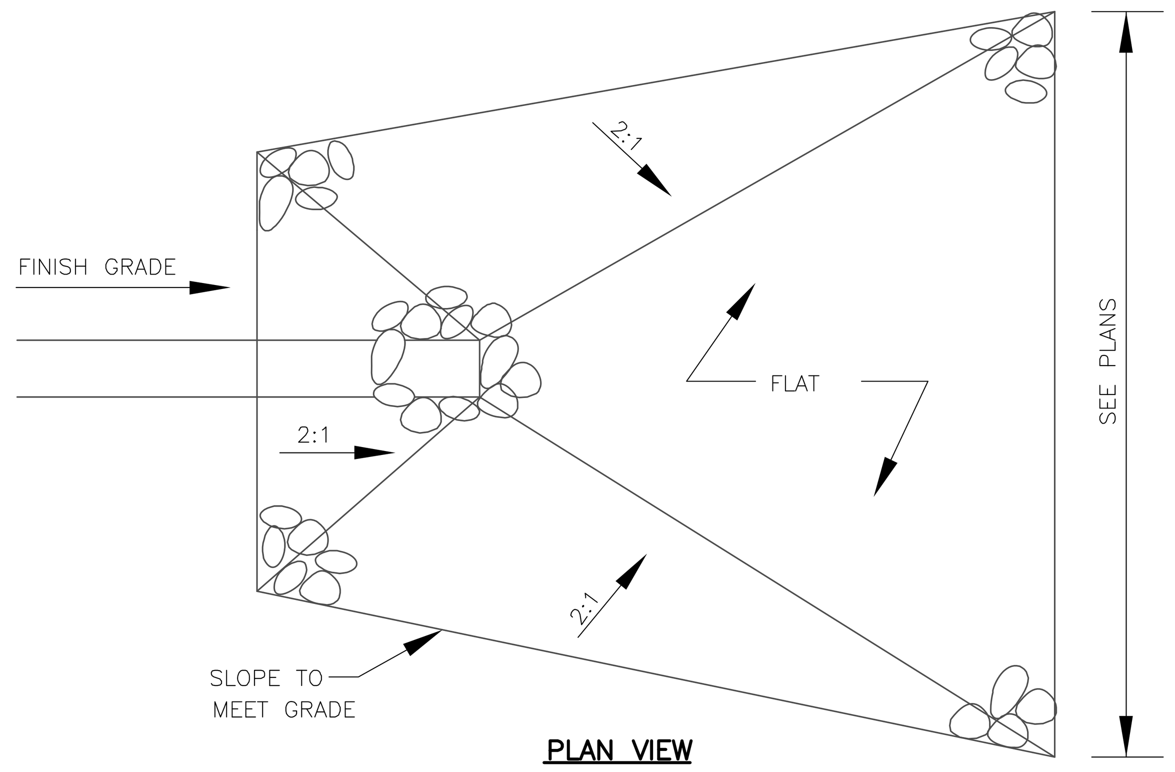


PLAN VIEW

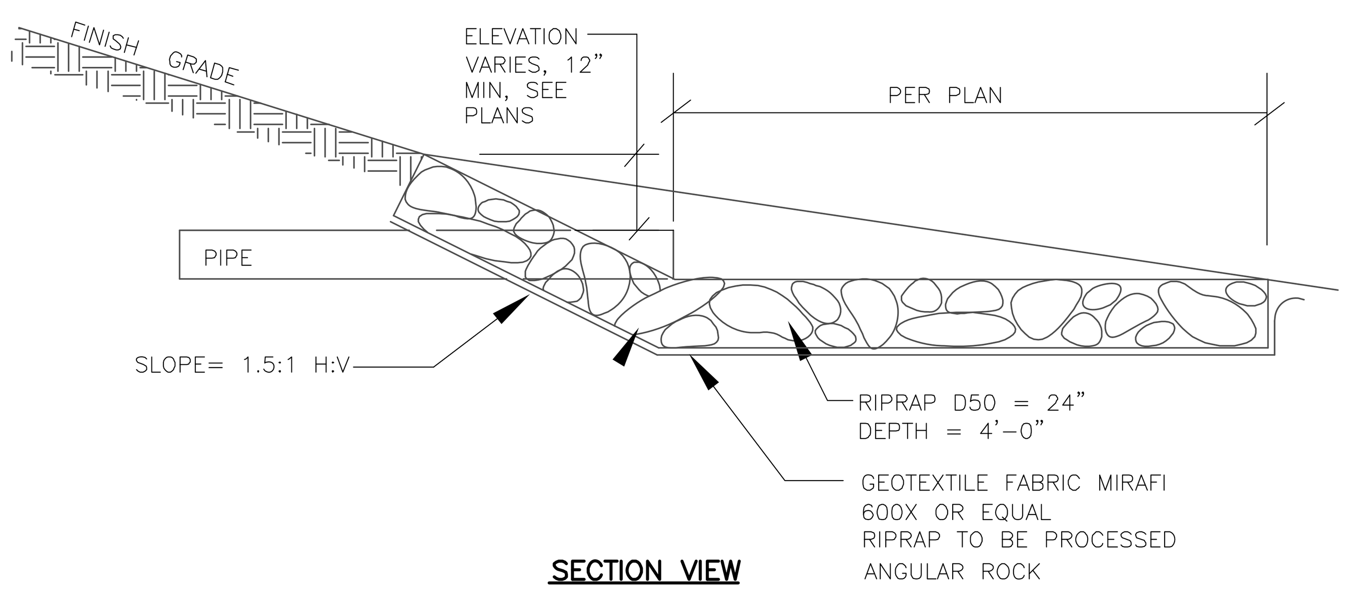


SECTION VIEW

## RIPRAP APRON

NOT TO SCALE

### RIPRAP OUTLET CONSTRUCTION NOTES (REFER TO RIPRAP APRON DETAIL ON DETAIL SHEET)

PRE-CONSTRUCTION

1. MEET ON SITE WITH OWNER, SITE CONTRACTOR, AND THE DESIGN ENGINEER TO DISCUSS SCOPE OF WORK AND EXPECTATIONS. DETERMINE LIMITS OF TIDAL "SPARTINA" GRASS.
2. CONTRACTOR SHALL HAVE ALL MATERIALS APPROVED BY THE DESIGN ENGINEER PRIOR TO INSTALLATION.

CONSTRUCTION PHASE

1. STABILIZE DISTURBED AREAS IN ACCORDANCE WITH THE EROSION AND SEDIMENT CONTROL BMP MANUAL, LATEST EDITION. SEE THE EROSION & SEDIMENT CONTROL NOTES AND PLAN FOR ADDITIONAL REQUIREMENTS. PROTECT NEARBY TREES, WHICH ARE PROPOSED TO REMAIN. TO THE EXTENT PRACTICAL, PROTECT THE ROOT ZONE OF THESE TREES.
2. THE CONTRACTOR SHALL CONSIDER THE TIDE SCHEDULE CAREFULLY; AND SHALL SCHEDULE WORK TO AVOID INTERRUPTIONS OF DAYLIGHT WORKING HOURS WITH HIGH TIDES. WORKING WITHIN TIDAL WATERS IS NOT PERMITTED.
3. THE CONTRACTOR SHALL ONLY WORK IN AREAS THAT CAN BE COMPLETED DURING EACH CONSTRUCTION DAY. NO AREAS SHALL BE EXCAVATED BY THE CONTRACTOR AND LEFT EXPOSED, AS THESE AREAS WILL BE SUBJECT TO EROSION FROM TIDAL SURGES OR STORM EVENTS.
4. WITHIN VEGETATIVE AREA PROPOSED TO BE DISTURBED, CAREFULLY REMOVE THE TOP ORGANIC LAYER (12"±) BELOW ELEVATION DETERMINED AT PRECONSTRUCTION MEETING. REMOVE USING METHOD THAT WILL KEEP THE VEGETATION SYSTEM INTACT. STOCKPILE THE ORGANIC LAYER IN A MANNER SO THAT MATERIAL CAN BE REUSED. REMOVE ONLY ENOUGH VEGETATION NEEDED TO INSTALL THE TIDE GATE VAULT AND SEWER PIPE IN ACCORDANCE WITH THE CROSS-SECTION. ORGANIC LAYER REMOVAL, STORAGE AND PLACEMENT SHALL BE INCIDENTAL TO THE RELATED PIPE PAY ITEM.
5. PIPE INSTALLATION: LOW PERMEABILITY DAMS OF NATURAL CLAY, BETONITE OR FLOWABLE FILL SHALL BE INSTALLED AS SHOWN TO MINIMIZE TIDAL FLOW THROUGH THE BACKFILL. DAMS SHALL EXTEND A MINIMUM 1 FOOT BELOW THE TRENCH BOTTOM, 1 FOOT BEYOND THE SIDEWALLS AND UP TO ELEVATION 7.4 OR TOP OF FINISHED GRADE. DAMS SHALL BE A MINIMUM OF 2 FEET THICKNESS. COSTS OF LOW PERMEABILITY DAMS SHALL BE INCIDENTAL TO THE CONTRACT.
6. INSTALL RIPRAP APRON IN ACCORDANCE WITH THE DETAILS. ONCE THE RIPRAP SLOPE IS COMPLETELY INSTALLED, THE CONTRACTOR SHALL GRADE THE DISTURBED AREAS UNIFORMLY TO MATCH EXISTING TOPOGRAPHY (U.N.O.) AND THE NEW RIPRAP EDGE.
7. PLACE EXISTING ORGANIC MATERIAL IN DISTURBED VEGETATIVE AREAS BELOW ELEVATION 10, WORKING FROM THE OUTFALL TO THE VAULT. DISTURBED VEGETATIVE AREAS ABOVE ELEVATION 10 SHALL HAVE LOAM AND SEED. ORGANIC LAYER REMOVAL, STORAGE AND PLACEMENT SHALL BE INCIDENTAL TO THE RELATED PIPE PAY ITEM.
8. INSPECT THE SITE EVERY TWO WEEKS FOR SIGNS OF EROSION AND ESTABLISHMENT OF VEGETATION. REPAIR ERODED AREAS AND REPLANT VEGETATION TO ESTABLISH 75% VEGETATION CATCH, AS REQUIRED.
9. IN AREAS REQUIRING REPLANTING, INSTALL NORTH AMERICAN GREEN C125BN EROSION CONTROL FABRIC OR APPROVED EQUAL IN ACCORDANCE WITH MANUFACTURER'S RECOMMENDATIONS (PAY ITEM 613.319).
10. USING RAZOR BLADE, CAREFULLY CUT HOLES 1 FOOT O.C. AND IN ROWS SPACED 1 FOOT APART. LOOSELY OFFSET HOLES BETWEEN ROWS FOR APPROXIMATELY 6-8 HOLES PER SQUARE YARD. PLANT CORD GRASS SPARTINA PATENS (SALT MEADOW GRASS) AND SPARTINA ALTERNIFLORA (SMOOTH CORDGRASS) PLUGS IN ALTERNATING FASHION. COSTS ASSOCIATED WITH CUTTING FABRIC AND PLANTING GRASS PLUGS WILL BE PAID THROUGH THE BID ITEM 615.072.

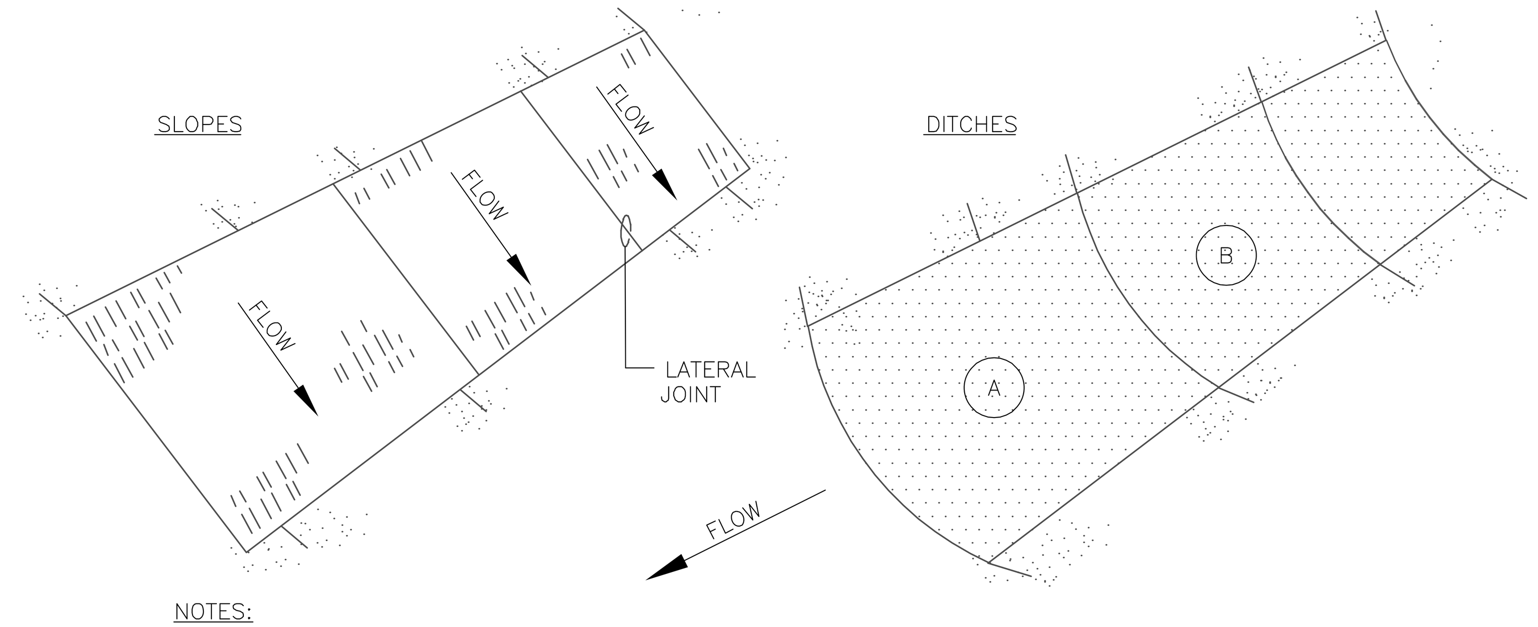


NOTES:

1. BURY THE TOP END OF THE MESH MATERIAL IN A 6" TRENCH AND BACKFILL AND TAMP TRENCHING SECURE END WITH STAPLES AT 6" SPACING, 4" DOWN FROM EXPOSED END.
2. FLOW DIRECTION JOINTS TO HAVE UPPER END OF LOWER STRIP BURIED WITH UPPER LAYERS OVERLAPPED 4" AND STAPLED. OVERLAP B OVER A.
3. LATERAL JOINTS TO HAVE 4" OVERLAP OF STRIPS. STAPLE 18" ON CENTER.
4. STAPLE OUTSIDE LATERAL EDGE 2' ON CENTER.
5. WIRE STAPLES TO BE MIN. OF # 11 WIRE 6" LONG AND 1-1/2" WIDE.
6. USE NORTH AMERICAN GREEN 125BN OR APPROVED EQUAL.
7. WHERE EROSION CONTROL BLANKET IS REQUIRED OR NEEDED, IT SHALL BE CONSIDERED INCIDENTAL TO THE RELATED PAY ITEM OR COSTS OF CONSTRUCTION.

## EROSION CONTROL BLANKET DETAIL

NOT TO SCALE

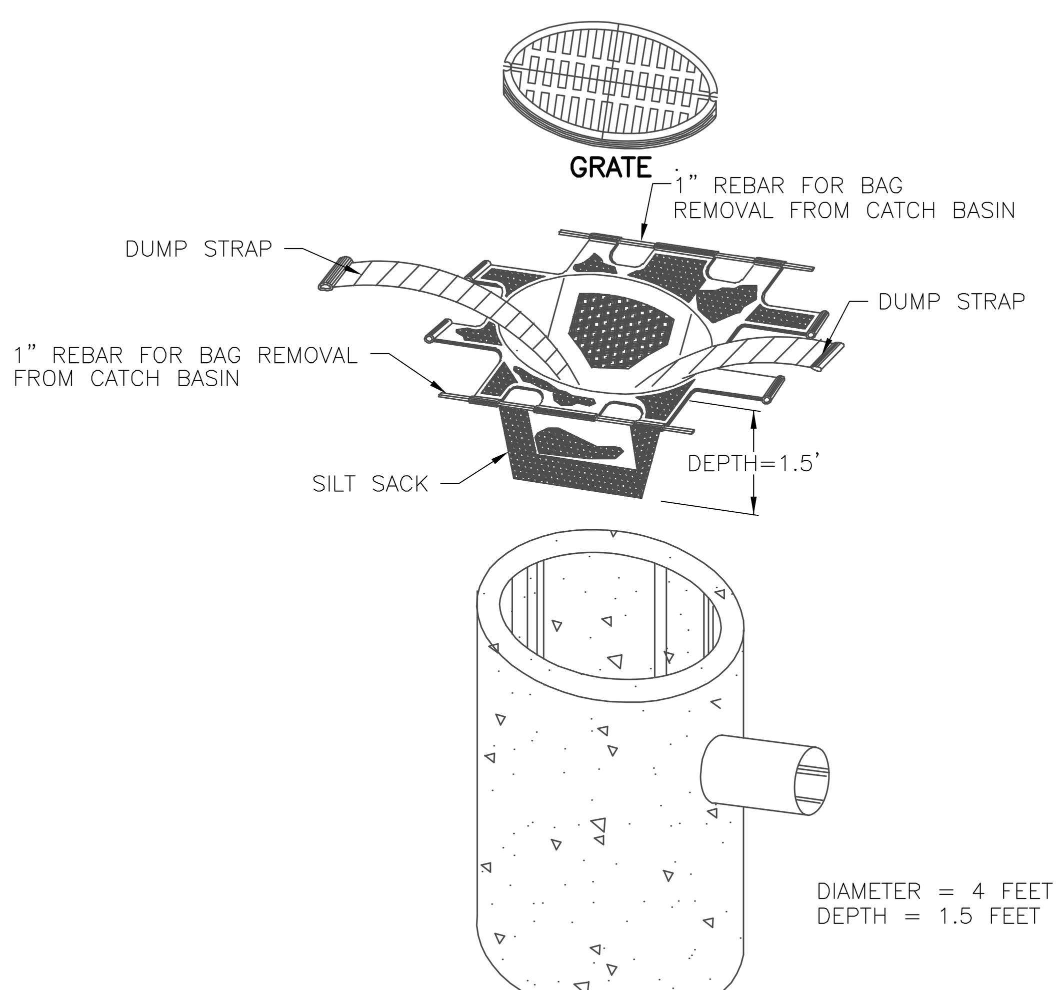


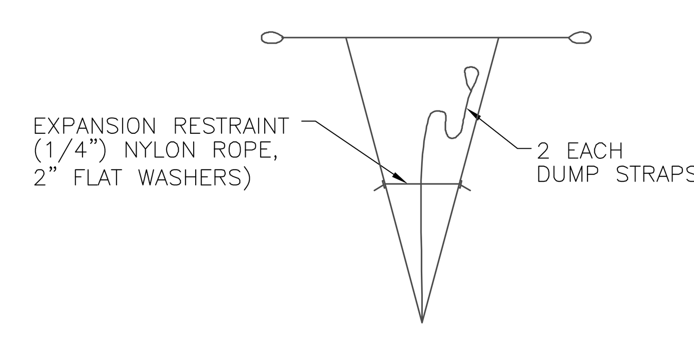


BAG DETAIL

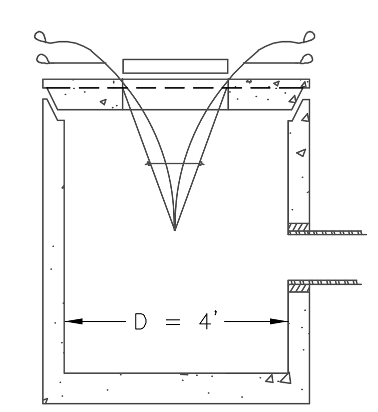


INSTALLATION DETAIL

NOTES:

1. REMOVE THE CATCH BASIN GRATE AND PLACE THE SACK INTO THE OPENING. HOLD OUT APPROXIMATELY SIX (6) INCHES OF THE SACK BEYOND THE BASIN FRAME TO ALLOW ACCESS TO THE "SILT SACK" LIFTING STRAPS. REPLACING THE GRATE BACK INSIDE OF ITS FRAME WILL HOLD THE SACK IN PLACE.
2. THE CONTRACTOR SHALL BE RESPONSIBLE FOR MONITORING AND MAINTAINING THIS SEDIMENT CONTROL DEVICE. THE SACK IS CONSIDERED FULL AND READY TO EMPTY WHEN THE THE "RESTRAINT CORD" IS NO LONGER VISIBLE.
3. THE "SILT SACK" IS REMOVED BY PLACING TWO (2) PIECES IF 1 INCH DIAMETER REBAR THROUGH THE LIFTING LOOPS LOCATED ON EACH SIDE OF THE SACK AND LIFTING WITH AN APPROPRIATE PIECE OF CONSTRUCTION EQUIPMENT. THE LIFTING STRAPS ARE CONNECTED TO THE BOTTOM OF THE SACK AND THE LIFTING ACTION WILL CAUSE THE SACK TO TURN INSIDE OUT, AND EMPTYING THE CONTENTS. THE SACK SHOULD THEN BE CLEANED, RINSED AND RETURNED TO ITS ORIGINAL SHAPE AND PLACED BACK IN THE BASIN.
4. THE "SILT SACK" IS REUSABLE, THEREFORE, ONCE THE CONSTRUCTION CYCLE IS COMPLETE, REMOVE THE SACK FROM THE BASIN, CLEAN AND STORE OUT OF DIRECT SUNLIGHT UNTIL ITS NEXT USE.
5. THE "SILT SACK" SEDIMENT CONTROL DEVICE IS MANUFACTURED BY: ACF ENVIRONMENTAL 1801-A WILLIS ROAD RICHMOND, VA. 23237 PHONE: 800-644-9223 FAX: 804-271-3074
6. WITH STRUCTURES WITH CURB INLETS, CONTRACTOR SHALL USE "SILT SACKS" CURB DEFLECTOR, ANCHORED STRAW WATTLES OR EQUIVALENT COMBINATION OF PRODUCTS

## SEDIMENT CONTROL DEVICE "SILT SACK" FOR CATCH BASINS

NOT TO SCALE

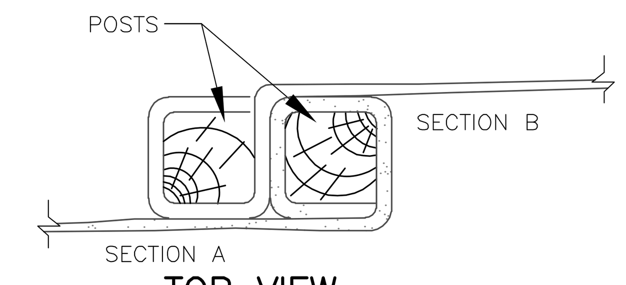


TOP VIEW

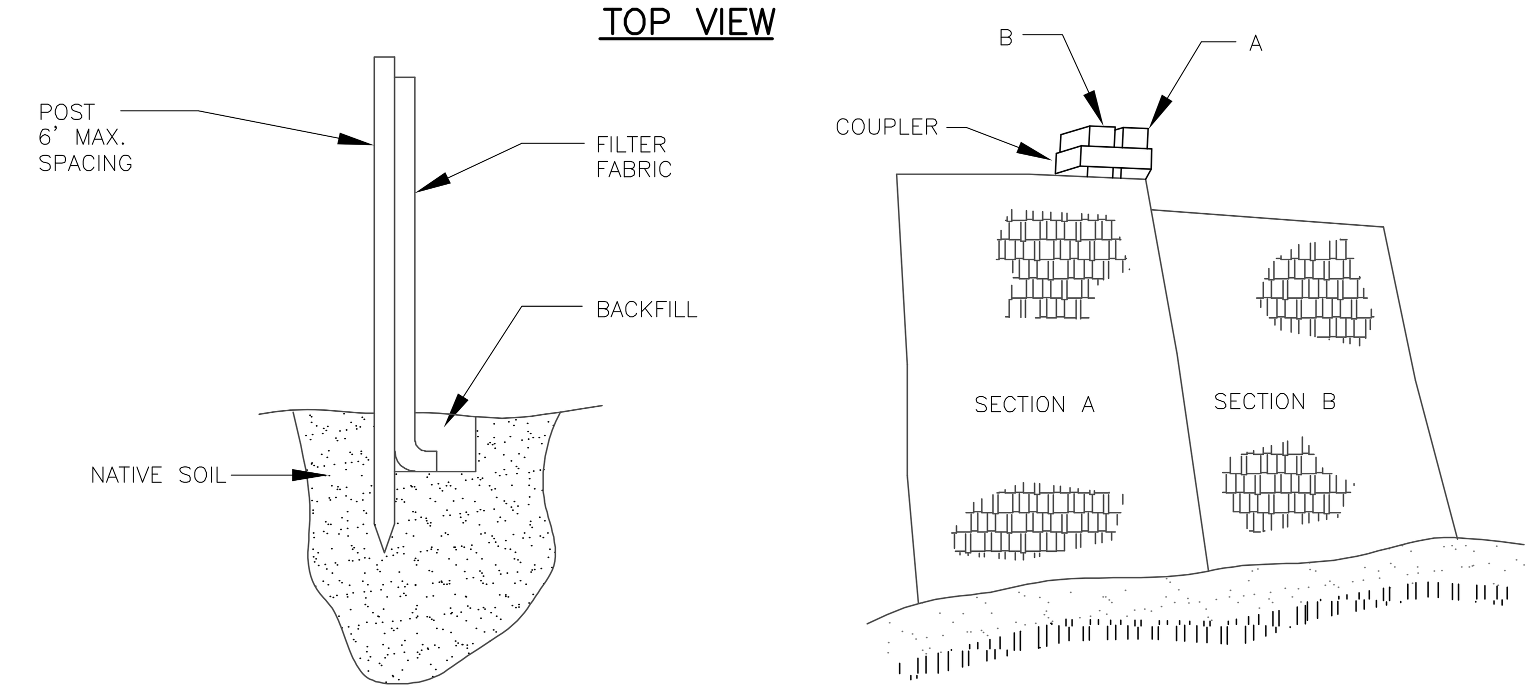


INSTALLATION NOTES:

1. EXCAVATE A 6"x 6" TRENCH ALONG THE LINE OF PLACEMENT FOR THE FILTER BARRIER.
2. UNROLL A SECTION AT A TIME AND POSITION THE POSTS AGAINST THE BACK (DOWNSTREAM) WALL OF THE TRENCH.
3. DRIVE POSTS INTO THE GROUND UNTIL APPROXIMATELY 2" OF FABRIC IS LYING ON THE TRENCH BOTTOM.
4. LAY THE TOE-IN FLAP OF FABRIC ONTO THE UNDISTURBED BOTTOM OF THE TRENCH, BACKFILL THE TRENCH AND TAMP THE SOIL. TOE-IN CAN ALSO BE ACCOMPLISHED BY LAYING THE FABRIC FLAP ON UNDISTURBED GROUND AND PILING AND TAMPING FILL AT THE BASE, BUT MUST BE ACCOMPANIED BY AN INTERCEPTION DITCH.
5. JOIN SECTION AS SHOWN ABOVE.
6. BARRIER SHALL BE MIRAFI SILT FENCE OR EQUAL.

## SILT FENCE

NOT TO SCALE

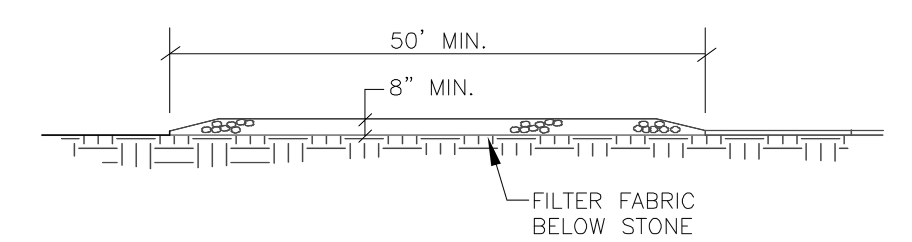


PROFILE

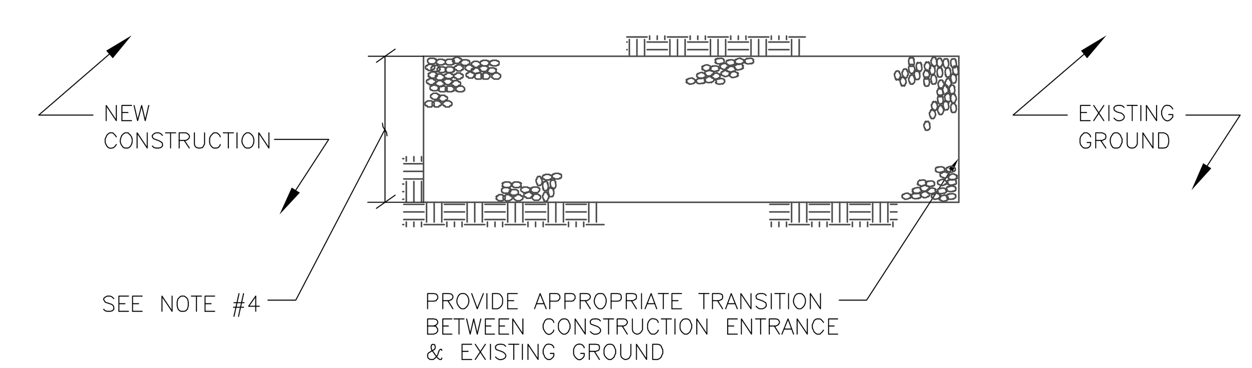


PLAN

NOTES:

1. STONE SIZE- AASHTO DESIGNATION M43, SIZE NO. 2 (2 1/2" TO 1 1/2"). USE CRUSHED STONE.
2. LENGTH- AS SHOWN ON PLANS, MIN. 50 FEET.
3. THICKNESS- NOT LESS THAN EIGHT (8) INCHES.
4. WIDTH- NOT LESS THAN FULL WIDTH OF ALL POINT OF INGRESS OR EGRESS.
5. MAINTENANCE- THE ENTRANCE SHALL BE MAINTAINED IN A CONDITION WHICH WILL PREVENT TRACKING OR FLOWING OF SEDIMENT ONTO PUBLIC RIGHT-OF-WAY. THIS MAY REQUIRE PERIODIC TOP DRESSING WITH ADDITIONAL STONE AS CONDITIONS DEMAND AND REPAIR AND/OR CLEANOUT OF ANY MEASURES USED TO TRAP SEDIMENT. ALL SEDIMENT SPILLED, DROPPED, WASHED OR TRACKED ONTO PUBLIC RIGHT-OF-WAY MUST BE REMOVED IMMEDIATELY.

## STABILIZED CONSTRUCTION ENTRANCE

NOT TO SCALE

Civil 3D 2013 Drawing Name:
17112 D.dwg, TAB:D6

CITY PROPERTY PLAN BOOK SHEETS:
I & I SHEETS: III-9, III-II

REFERENCES:

DESIGN BY: RLM
DRAWN BY: SAP
CHECKED BY: RAM
SCALE: 1" = 20'
DATE: 02. 16.2018

STATE OF MAINE
ROBERT A. McSORLEY
No. 8588
LICENSED
PROFESSIONAL ENGINEER
02. 16.2018

BEDFORD STREET
SEWER SEPERATION PROJECT

STANDARD CONSTRUCTION DETAILS

CITY OF PORTLAND, MAINE
PUBLIC WORKS DEPARTMENT
WATER RESOURCES DIVISION

RESURGAM
CITY OF PORTLAND, MAINE

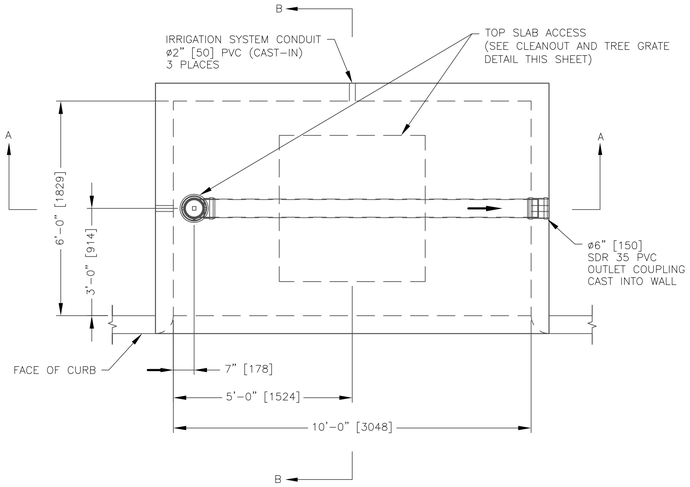


PLAN VIEW

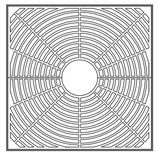

48" x 48" [1219 x 1219]

TREE GRATE

(ACTUAL PRODUCT MAY VARY)

N.T.S.

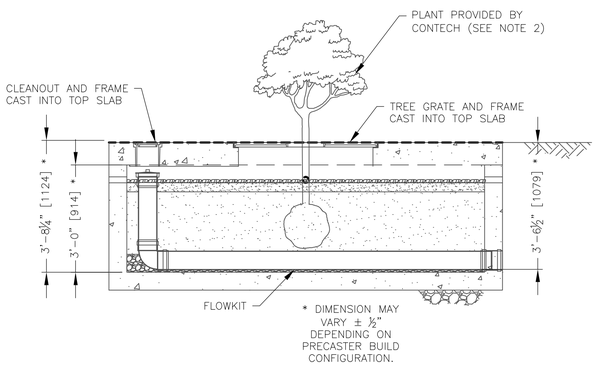


SECTION A–A

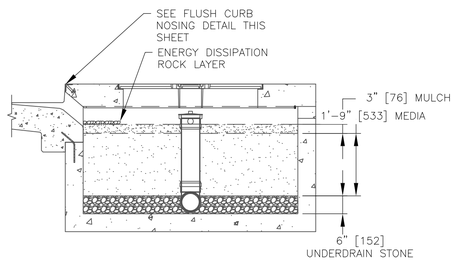


SECTION B–B

FILTERRA 10x6 OFFLINE STANDARD DETAIL MODEL: FT1006

NOT TO SCALE

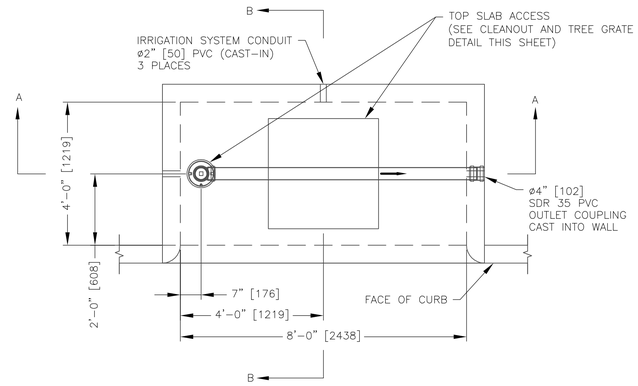


PLAN VIEW

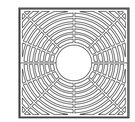

36" x 36" [914 x 914]

TREE GRATE

(ACTUAL PRODUCT MAY VARY)

N.T.S.

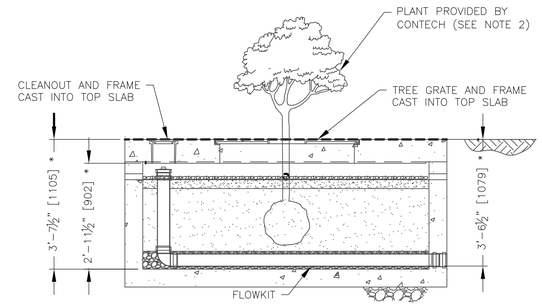


SECTION A–A

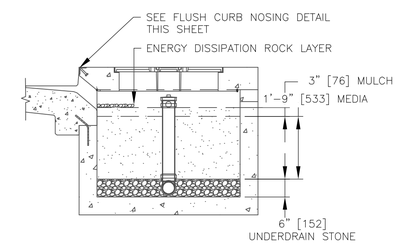


SECTION B–B

FILTERRA 8x4 OFFLINE STANDARD DETAIL MODEL: FT0804

NOT TO SCALE

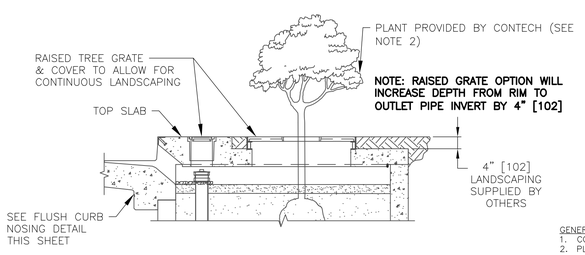


OPTIONAL RECESSED TOP SLAB DETAIL

(TYPICAL TOP SLAB DETAIL SHOWN IN SECTION B–B)



ø7" x 8" [178 x 203]

CLEANOUT

(ACTUAL PRODUCT MAY VARY)

N.T.S.

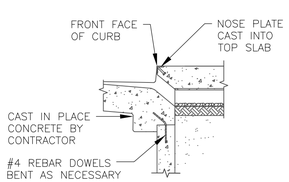


**FLUSH CURB NOSING DETAIL**

(OTHER CURB NOSING OPTIONS MAY BE AVAILABLE)

GENERAL NOTES

1. CONTECH TO PROVIDE ALL MATERIALS UNLESS NOTED OTHERWISE.
2. PLANT, MULCH, AND DISSIPATION ROCK ARE SUPPLIED BY CONTECH AND DELIVERED AT TIME OF SYSTEM ACTIVATION. PLANT SELECTION SHALL BE DONE BY THE ENGINEER OF RECORD IN ACCORDANCE WITH THE PROJECT PLANS AND SPECIFICATIONS.
3. DIMENSIONS MARKED WITH ( ) ARE REFERENCE DIMENSIONS. ACTUAL DIMENSIONS MAY VARY.
4. FOR SITE SPECIFIC DRAWINGS WITH DETAILED VAULT DIMENSIONS AND WEIGHTS, PLEASE CONTACT YOUR CONTECH REPRESENTATIVE. www.ContechES.com
5. FILTERRA WATER QUALITY STRUCTURE SHALL BE IN ACCORDANCE WITH ALL DESIGN DATA AND INFORMATION CONTAINED IN THIS DRAWING.
6. STRUCTURE DESIGNED FOR PEDESTRIAN LIVE LOAD WITH H5 (4,000 LBS.) WHEEL LOAD MOUNTING THE CURB AND ADJACENT HS-2 LIVE LOAD SURCHARGE ON THE WALLS OF THE STRUCTURE.
7. FILTERRA STRUCTURE SHALL BE PRECAST CONCRETE CONFORMING TO ASTM C-857, ASTM C-918, AND ACI-318 LOAD FACTOR DESIGN METHOD.

INSTALLATION NOTES

A. ANY SUB-BASE, BACKFILL DEPTH, AND/OR ANTI-FLOTATION PROVISIONS ARE SITE-SPECIFIC DESIGN CONSIDERATIONS AND SHALL BE SPECIFIED BY ENGINEER OF RECORD.
B. CONTRACTOR TO PROVIDE EQUIPMENT WITH SUFFICIENT LIFTING AND REACH CAPACITY TO LIFT AND SET THE FILTERRA VAULT (LIFTING CLUTCHES PROVIDED). SPREADER BAR WITH SUFFICIENT CABLE IS REQUIRED FOR SAFETY AND REDUCTION OF DAMAGE TO CONCRETE STRUCTURE.
C. CONTRACTOR TO INSTALL JOINT SEALANT BETWEEN ALL VAULT SECTIONS AND ASSEMBLE VAULT.
D. CONTRACTOR TO PROVIDE AND INSTALL OUTLET PIPE. PVC COUPLING CAST-IN TO WALL FOR OUTLET PIPE CONNECTION.
E. CONTRACTOR TO SUPPLY AND INSTALL INLET PROTECTION BAR IF REQUIRED BY LOCAL JURISDICTION.
F. CONTRACTOR TO TAKE APPROPRIATE MEASURES TO PROTECT FILTERRA MEDIA BAY FROM CONSTRUCTION-RELATED EROSION RUNOFF.
G. CONTECH IS RESPONSIBLE FOR ACTIVATION OF THE SYSTEM AND PLANTING OF THE PLANT THAT IS SPECIFIED. ACTIVATION ONLY OCCURS WHEN THE SITE IS FULLY STABILIZED, FINAL PAVEMENT INSTALLED AND SWEPT CLEAN OF CONSTRUCTION SEDIMENT.
H. ALL FILTERRA UNITS MUST BE WATERED BY IRRIGATION LINES OR SPRINKLER SYSTEMS ON A REGULAR BASIS. EACH FILTERRA UNIT INCLUDES IRRIGATION HOLES FOR NEW OR EXISTING IRRIGATION LINES.

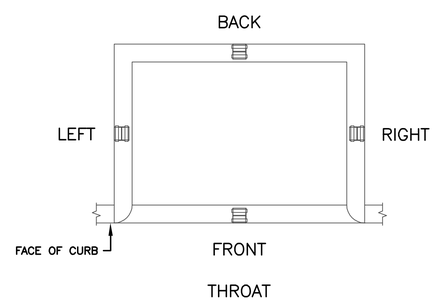


OUTLET PIPE ORIENTATION OPTIONS

ORIENTATION REFERENCE IS INLET THROAT

REFERENCES:

Civil 3D 2013 Drawing Name:
17112 D.dwg, TAB:D7

CITY PROPERTY PLAN BOOK SHEETS:
I & J SHEETS: III-9, III-11

| | |
|---|---|
| DESIGN BY: | RLM |
| DRAWN BY: | SAP |
| CHECKED BY: | RAM |
| SCALE: | 1" = 20' |
| DATE: | 02. 16.2018 |

STATE OF MAINE ROBERT A. MCSORLEY No. 6569 LICENSED PROFESSIONAL ENGINEER

BEDFORD STREET
SEWER SEPERATION PROJECT

STANDARD CONSTRUCTION DETAILS

CITY OF PORTLAND, MAINE
PUBLIC WORKS DEPARTMENT
WATER RESOURCES DIVISION

RESURGAM CITY OF PORTLAND, MAINE

SHEET #
43 OF 46

PLAN NUMBER

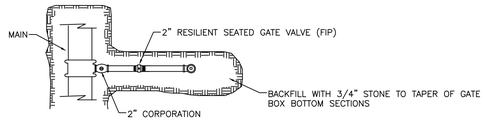


TOP VIEW

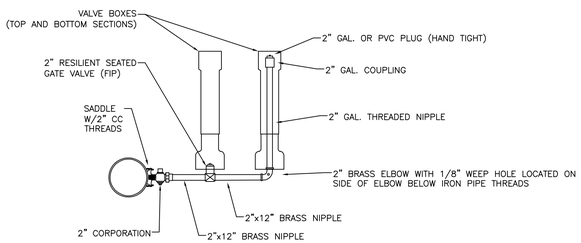


SIDE VIEW

## SIDE-ARM BLOW-OFF 4" & LARGER MAINS

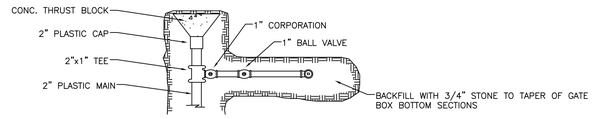


TOP VIEW

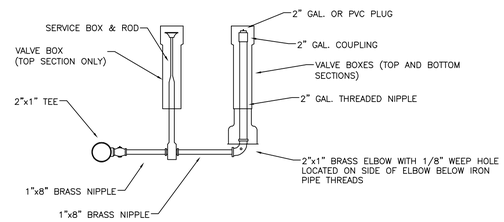


SIDE VIEW

## SIDE-ARM BLOW-OFF 2" MAIN

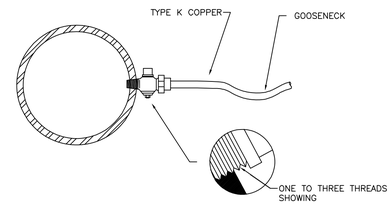


## SERVICE TAP
(3/4" AND 1" C.C. THREAD)

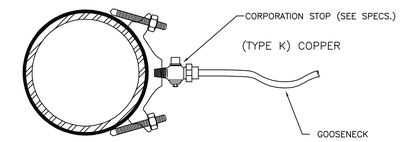


## SERVICE SADDLE
(1-1/2" AND 2" C.C. THREAD)

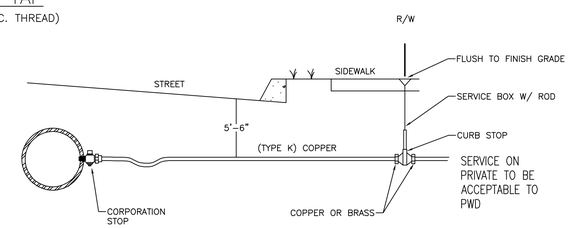


## TYPICAL SERVICE CONNECTION

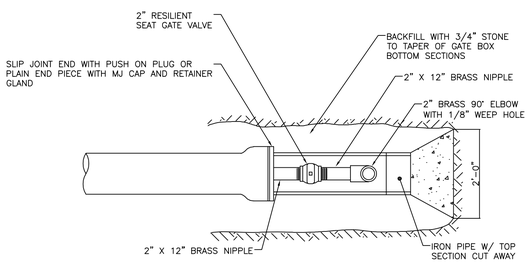


TOP VIEW

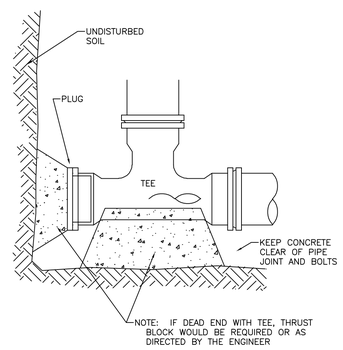


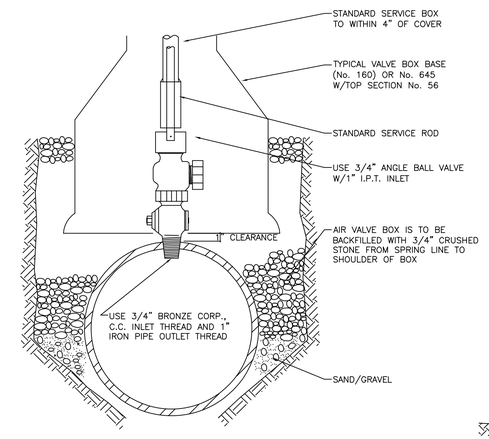


## TYPICAL AIR VALVE (1")

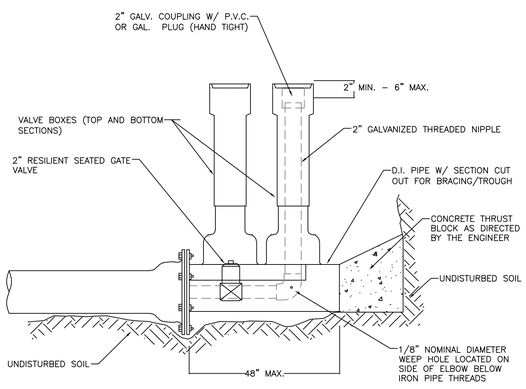


## STANDARD 2" BLOW OFF

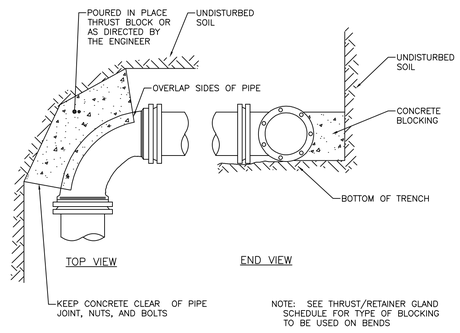


## STANDARD BEND BLOCKING

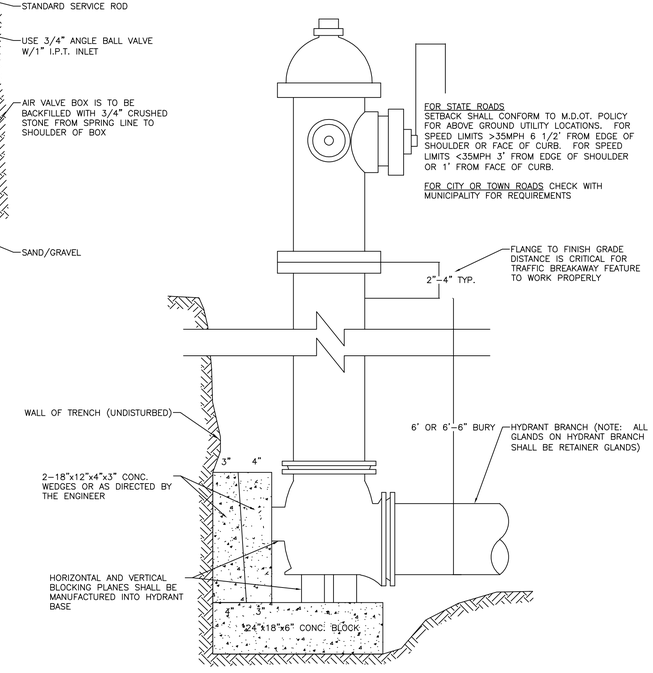


## TYPICAL HYDRANT INSTALLATION DETAIL

Civil 3D 2013 Drawing Name:
17112 D.dwg, TAB:D8

REFERENCES:

CITY PROPERTY PLAN BOOK SHEETS:
I & J SHEETS: III-9, III-11

| | |
|---|---|
| DESIGN BY: | RLM |
| DRAWN BY: | AAP |
| CHECKED BY: | RAM |
| SCALE: | 1" = 20' |
| DATE: | 02.16.2018 |

STATE OF MAINE ROBERT A. MOSELEY No. 8568 LICENSED PROFESSIONAL ENGINEER

BEDFORD STREET
SEWER SEPERATION PROJECT

44 - PORTLAND WATER DISTRICT
DETAILS

PORTLAND WATER DISTRICT
225 DOUGLAS STREET
PORTLAND, MAINE

SHEET #
44 OF 46

PLAN NUMBER

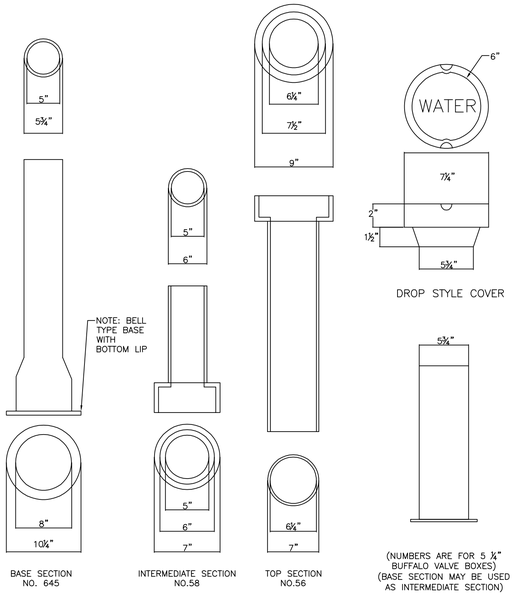


VALVE BOX & COVER

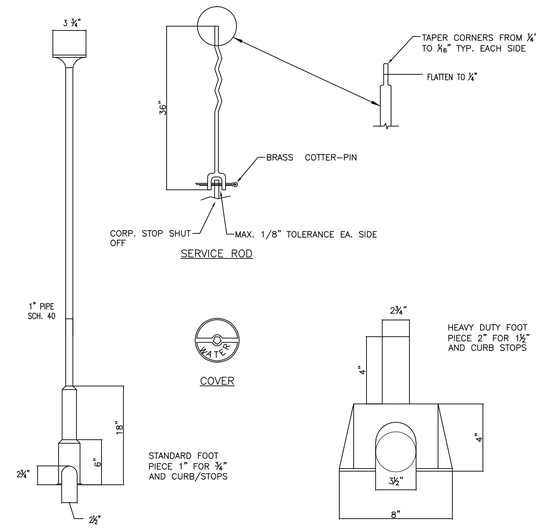


NOTE : ANY EXTENSION OF SERVICE BOX REQUIRES:
1. 1" FEMALE IRON PIPE COUPLING
2. 1" THREADED PIPE (THIS IS TO BE A NON-WELDED, TWO PIECE ARRANGEMENT. SLIP ON ADAPTERS ARE NOT PERMISSIBLE.)

SERVICE BOX

FOOT PIECE

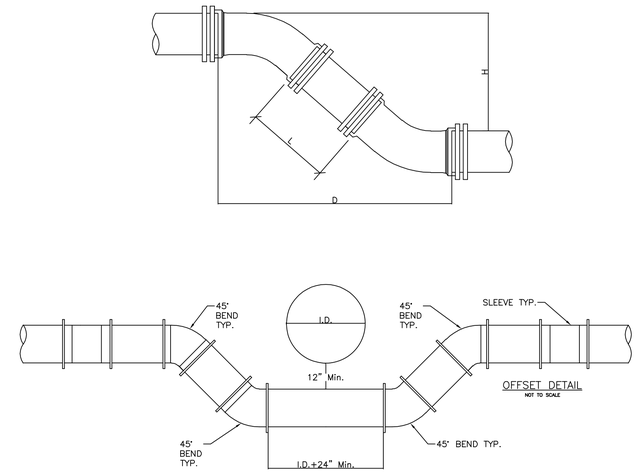


OFFSET DETAIL
NOT TO SCALE

NOTE:
DIMENSIONS APPLICABLE FOR SIGMA COMPACT BENDS. FOR TYLER COMPACT BENDS, ADD 1/2" TO "D" DIMENSION AND SUBTRACT 1/2" FROM "L" DIMENSION. FOR OTHER FITTINGS REFER TO MANUFACTURER'S RECOMMENDATIONS.

| | 6" PIPE | | 8" PIPE | | 12" PIPE | |
|---|---|---|---|---|---|---|
| H | D | L | D | L | D | L |
| 12" | 1' 6-1/2" | 0' 10-1/2" | 1' 7-1/2" | 0' 9-1/2" | 1' 11-1/2" | 0' 5-1/2" |
| 13" | 1' 7-1/2" | 0' 11-7/8" | 1' 8-1/2" | 0' 10-7/8" | 2' 0-1/2" | 0' 6-7/8" |
| 14" | 1' 8-1/2" | 1' 1-5/16" | 1' 9-1/2" | 1' 0-5/16" | 2' 1-1/2" | 0' 8-5/16" |
| 15" | 1' 9-1/2" | 1' 2-11/16" | 1' 10-1/2" | 1' 1-11/16" | 2' 2-1/2" | 0' 9-11/16" |
| 16" | 1' 10-1/2" | 1' 4-1/8" | 1' 11-1/2" | 1' 3-1/8" | 2' 3-1/2" | 0' 11-1/8" |
| 17" | 1' 11-1/2" | 1' 5-9/16" | 2' 0-1/2" | 1' 4-9/16" | 2' 4-1/2" | 1' 0-9/16" |
| 18" | 2' 0-1/2" | 1' 6-15/16" | 2' 1-1/2" | 1' 5-15/16" | 2' 5-1/2" | 1' 1-15/16" |
| 19" | 2' 1-1/2" | 1' 8-3/8" | 2' 2-1/2" | 1' 7-3/8" | 2' 6-1/2" | 1' 3-3/8" |
| 20" | 2' 2-1/2" | 1' 9-13/16" | 2' 3-1/2" | 1' 8-13/16" | 2' 7-1/2" | 1' 4-13/16" |
| 21" | 2' 3-1/2" | 1' 11-3/16" | 2' 4-1/2" | 1' 10-3/16" | 2' 8-1/2" | 1' 6-3/16" |
| 22" | 2' 4-1/2" | 2' 0-5/8" | 2' 5-1/2" | 1' 11-5/8" | 2' 9-1/2" | 1' 7-5/8" |
| 23" | 2' 5-1/2" | 2' 2" | 2' 6-1/2" | 2' 1" | 2' 10-1/2" | 1' 9" |
| 24" | 2' 6-1/2" | 2' 3-7/16" | 2' 7-1/2" | 2' 2-7/16" | 2' 11-1/2" | 1' 10-7/16" |
| 25" | 2' 7-1/2" | 2' 4-7/8" | 2' 8-1/2" | 2' 3-7/8" | 3' 0-1/2" | 1' 11-7/8" |
| 26" | 2' 8-1/2" | 2' 6-1/4" | 2' 9-1/2" | 2' 5-1/4" | 3' 1-1/2" | 2' 1-1/4" |
| 27" | 2' 9-1/2" | 2' 7-11/16" | 2' 10-1/2" | 2' 6-11/16" | 3' 2-1/2" | 2' 2-11/16" |
| 28" | 2' 10-1/2" | 2' 9-1/8" | 2' 11-1/2" | 2' 8-1/8" | 3' 3-1/2" | 2' 4-1/8" |
| 29" | 2' 11-1/2" | 2' 10-1/2" | 3' 0-1/2" | 2' 9-1/2" | 3' 4-1/2" | 2' 5-1/2" |
| 30" | 3' 0-1/2" | 2' 11-15/16" | 3' 1-1/2" | 2' 10-15/16" | 3' 5-1/2" | 2' 6-15/16" |
| 31" | 3' 1-1/2" | 3' 1-5/16" | 3' 2-1/2" | 3' 0-5/16" | 3' 6-1/2" | 2' 8-5/16" |
| 32" | 3' 2-1/2" | 3' 2-3/4" | 3' 3-1/2" | 3' 1-3/4" | 3' 7-1/2" | 2' 9-3/4" |
| 33" | 3' 3-1/2" | 3' 4-3/16" | 3' 4-1/2" | 3' 3-3/16" | 3' 8-1/2" | 2' 11-3/16" |
| 34" | 3' 4-1/2" | 3' 5-9/16" | 3' 5-1/2" | 3' 4-9/16" | 3' 9-1/2" | 3' 0-9/16" |
| 35" | 3' 5-1/2" | 3' 7" | 3' 6-1/2" | 3' 6" | 3' 10-1/2" | 3' 2" |
| 36" | 3' 6-1/2" | 3' 8-7/16" | 3' 7-1/2" | 3' 7-7/16" | 3' 11-1/2" | 3' 3-7/16" |
| 37" | 3' 7-1/2" | 3' 9-13/16" | 3' 8-1/2" | 3' 8-13/16" | 4' 0-1/2" | 3' 4-13/16" |
| 38" | 3' 8-1/2" | 3' 11-1/4" | 3' 9-1/2" | 3' 10-1/4" | 4' 1-1/2" | 3' 6-1/4" |
| 39" | 3' 9-1/2" | 4' 0-11/16" | 3' 10-1/2" | 3' 11-11/16" | 4' 2-1/2" | 3' 7-11/16" |
| 40" | 3' 10-1/2" | 4' 2-1/16" | 3' 11-1/2" | 4' 1-1/16" | 4' 3-1/2" | 3' 9-1/16" |
| 41" | 3' 11-1/2" | 4' 3-1/2" | 4' 0-1/2" | 4' 2-1/2" | 4' 4-1/2" | 3' 10-1/2" |
| 42" | 4' 0-1/2" | 4' 4-7/8" | 4' 1-1/2" | 4' 3-7/8" | 4' 5-1/2" | 3' 11-7/8" |
| 43" | 4' 1-1/2" | 4' 6-5/16" | 4' 2-1/2" | 4' 5-5/16" | 4' 6-1/2" | 4' 1-5/16" |
| 44" | 4' 2-1/2" | 4' 7-3/4" | 4' 3-1/2" | 4' 6-3/4" | 4' 7-1/2" | 4' 2-3/4" |
| 45" | 4' 3-1/2" | 4' 9-1/8" | 4' 4-1/2" | 4' 8-1/8" | 4' 8-1/2" | 4' 4-1/8" |
| 46" | 4' 4-1/2" | 4' 10-9/16" | 4' 5-1/2" | 4' 9-9/16" | 4' 9-1/2" | 4' 5-9/16" |
| 47" | 4' 5-1/2" | 4' 11-15/16" | 4' 6-1/2" | 4' 10-15/16" | 4' 10-1/2" | 4' 6-15/16" |
| 48" | 4' 6-1/2" | 5' 1-3/8" | 4' 7-1/2" | 5' 0-3/8" | 4' 11-1/2" | 4' 8-3/8" |
| 49" | 4' 7-1/2" | 5' 2-13/16" | 4' 8-1/2" | 5' 1-13/16" | 5' 0-1/2" | 4' 9-13/16" |
| 50" | 4' 8-1/2" | 5' 4-3/16" | 4' 9-1/2" | 5' 3-3/16" | 5' 1-1/2" | 4' 11-3/16" |
| 51" | 4' 9-1/2" | 5' 5-5/8" | 4' 10-1/2" | 5' 4-5/8" | 5' 2-1/2" | 5' 0-5/8" |
| 52" | 4' 10-1/2" | 5' 7-1/16" | 4' 11-1/2" | 5' 6-1/16" | 5' 3-1/2" | 5' 2-1/16" |
| 53" | 4' 11-1/2" | 5' 8-7/16" | 5' 0-1/2" | 5' 7-7/16" | 5' 4-1/2" | 5' 3-7/16" |
| 54" | 5' 0-1/2" | 5' 9-7/8" | 5' 1-1/2" | 5' 8-7/8" | 5' 5-1/2" | 5' 4-7/8" |
| 55" | 5' 1-1/2" | 5' 11-5/16" | 5' 2-1/2" | 5' 10-5/16" | 5' 6-1/2" | 5' 6-5/16" |

TYPICAL MAIN OFFSET

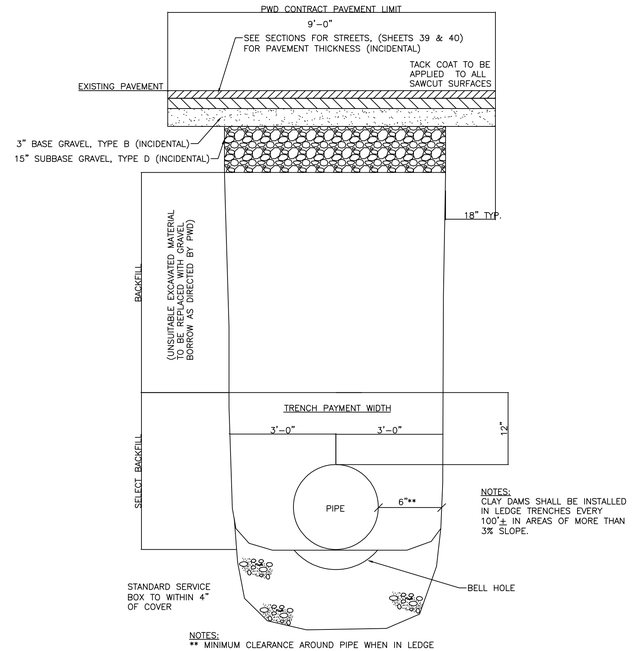


NOTES:
** MINIMUM CLEARANCE AROUND PIPE WHEN IN LEDGE

SECTION THRU EARTH TRENCH PERMANENT TRENCH REPAIR
N.T.S.

02/23/18 RAM ISSUE ADDENDUM #1

REFERENCES:

Civil 3D 2013 Drawing Name:
17112 D.dwg, TAB:D9

CITY PROPERTY PLAN BOOK SHEETS:
I & J SHEETS: III-9, III-11

DESIGN BY: RLM
DRAWN BY: AAP
CHECKED BY: RAM
SCALE: 1" = 20'
DATE: 02.16.2018

STATE OF MAINE
ROBERT A. MOSELEY
Mo. 8568
LICENSED PROFESSIONAL ENGINEER
02.23.2018

BEDFORD STREET
SEWER SEPERATION PROJECT

PORTLAND WATER DISTRICT DETAILS

PORTLAND WATER DISTRICT
225 DOUGLAS STREET
PORTLAND, MAINE

SHEET #
45 OF 46

PLAN NUMBER

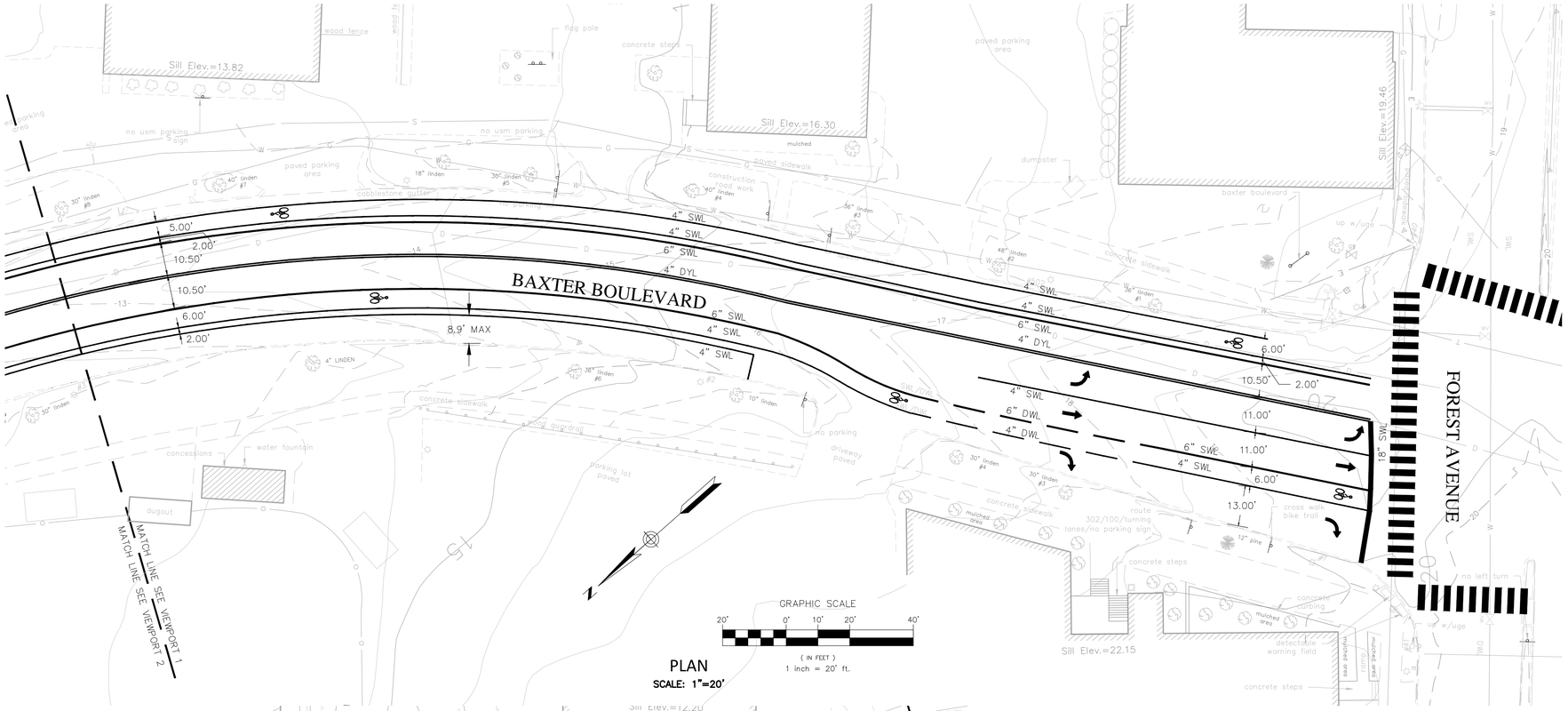


PLAN
SCALE: 1"=20'

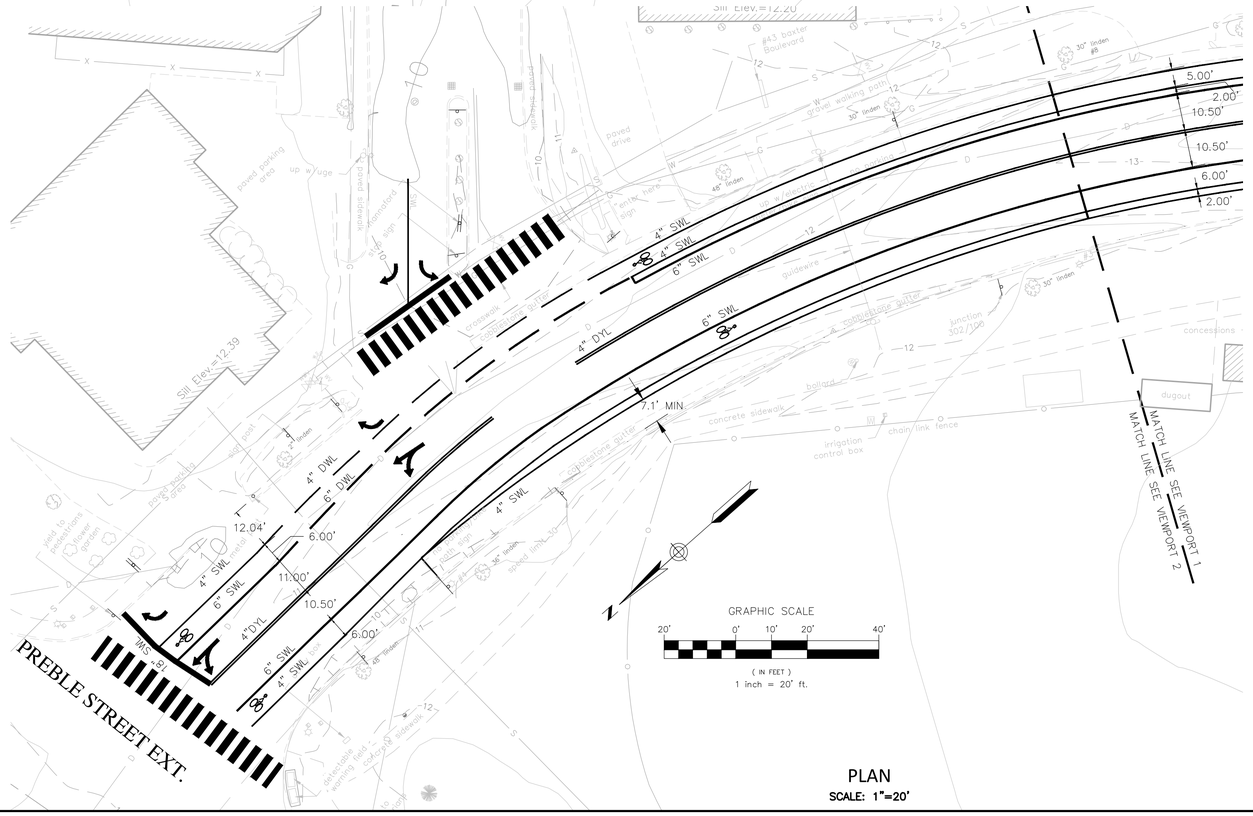


PLAN
SCALE: 1"=20'

# NOTES:

TWO BUFFERED BIKE LANES

PARKING NEUTRAL

PARKING LANE WIDTHS ALL OVER 7 FT.

DISTANCE FROM CENTER LINE TO CROWN OF ROAD RANGING FROM 0'-5'

# RESTRIPING

TOTAL SYMBOLS (EA): 21
- RIGHT ARROWS: 5
- LEFT ARROWS: 2
- STRAIGHT ARROWS: 2
- COMBO ARROW: 2
- BIKE SYMBOL: 9

WHITE PAINT (SF): 880

4" WHITE/YELLOW PAINT (LF): 3,890

6" WHITE/YELLOW PAINT (LF): 1,420

Civil 3D 2018 Drawing Name:
**"Baxter Blvd Restriping.dwg"**
Civil 3D 2015 Survey Database:
**"13058A"**

REFERENCES:

| | |
|---|---|
| SURVEY CREW: | LKS |
| DRAWN BY: | JML |
| CHECKED BY: | JWL |
| SCALE: | 1" = 20' |
| DATE: | JAN. 25, 2018 |

BEDFORD ST.
SEWER SEPARATION PROJECT

BAXTER BOULEVARD
RESTRIPING PLANS

CITY OF PORTLAND, MAINE
PUBLIC SERVICES DEPARTMENT
ENGINEERING DIVISION

SHEET #
R-1

PLAN NUMBER
1 OF 1