# CITY OF PORTLAND, MAINE
# CURTIS ROAD PUMP STATION UPGRADES

**PROJECT NO. 0231265.00**

## JULY 26, 2018

**60% DESIGN REVIEW-**
**NOT FOR CONSTRUCTION**

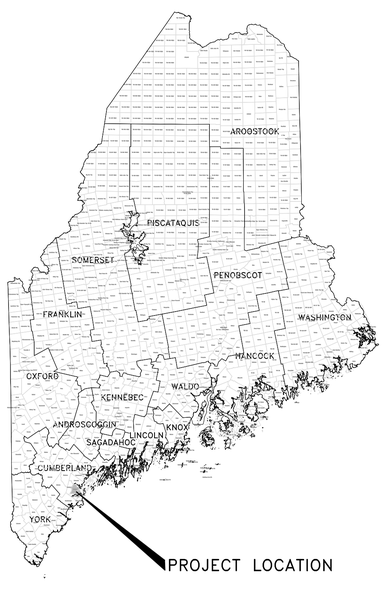


**PROJECT LOCATION MAP**

50 0 50 100
scale mile

N W E S

WOODARD & CURRAN

41 Hutchins Drive
Portland, Maine 04102
800.426.4262 | www.woodardcurran.com

COMMITMENT & INTEGRITY DRIVE RESULTS

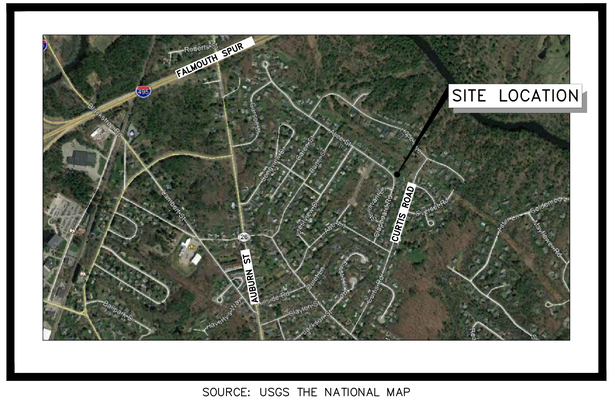


SOURCE: USGS THE NATIONAL MAP

**CURTIS ROAD PUMP STATION**
**SITE LOCATION MAP**

1000 0 1000 2000
scale feet

N W E S

\\woodardcurran.net\shared\Projects\0231265.00 Portland - Curtis and Franklin PS Des Bid\wip\Drawings\General\0231265-G-000.dwg, Jul 26, 2018 - 4:40pm

22x34 SHEET
1:1

# GENERAL NOTES

1. THE PROJECT IS LOCATED IN PORTLAND MAINE, ON CLAPBOARD ROAD AND IS GENERALLY DESCRIBED IN REBUILDING THE CURTIS ROAD PUMP STATION. THE WORK INCLUDES INSTALLATION OF A PACKAGE PUMP STATION, EMERGENCY GENERATOR, MODIFICATIONS TO THE EXISTING WETWELL, ELECTRICAL WORK, AND CONTROLS & COMMUNICATIONS WORK.
2. BASE PLAN COMPILED FROM THE FOLLOWING:
   –CURTIS ROAD PUMPING STATION FORCE MAIN AND GRAVITY SEWERS BY CITY OF PORTLAND DEPARTMENT OF PUBLIC WORKS DATED 1978.
3. LOCATIONS OF PROPERTY LINES AND RIGHT OF WAYS ARE APPROXIMATE (SHOWN FOR REFERENCE ONLY), UNLESS NOTED OTHERWISE, AND ARE NOT INTENDED TO REPRESENT LEGAL BOUNDARIES.
4. STATIONS AND OFFSETS FOR MANHOLES AND OTHER STRUCTURES ARE SHOWN TO THE CENTER OF EACH.
5. COMPLETE WORK IN ACCORDANCE WITH THE APPLICABLE FEDERAL, STATE AND LOCAL CODES. LAY OUT PROPOSED WORK AS SHOWN ON DRAWINGS. FIELD VERIFY KNOWN UTILITY LOCATIONS PRIOR TO COMMENCEMENT OF CONSTRUCTION AND EXCAVATE TEST PITS AS NECESSARY TO VERIFY KNOWN UTILITY LOCATIONS AND DEPTHS AT NO ADDITIONAL COST TO OWNER.
6. PERFORM CONSTRUCTION ACTIVITIES WITHIN THE CONFINES OF THE RIGHTS OF WAY OR WITHIN THE CONFINES OF TEMPORARY CONSTRUCTION EASEMENTS SECURED BY THE OWNER. OBTAIN PERMISSION FROM AND COORDINATE WITH PRIVATE PROPERTY OWNERS FOR ACTIVITY, MATERIAL STORAGE ETC., ON PRIVATE PROPERTY AT NO ADDITIONAL COST TO OWNER.
7. COORDINATE CONSTRUCTION WITH THE CITY OF PORTLAND, MAINE, UTILITY COMPANIES, DIG SAFE, EMERGENCY SERVICES WHERE APPLICABLE. NOTIFY UTILITIES PRIOR TO COMMENCING WORK TO ALLOW SUFFICIENT TIME TO LOCATE AND MARK THE LOCATION OF BURIED UTILITIES. CONTACT "DIG SAFE", TELEPHONE 811 OR 877–DIG–SAFE.
8. PROVIDE COORDINATION AND THE SERVICES OF CENTRAL MAINE POWER CO. (CMP) WHERE NECESSARY FOR COMPLETION OF WORK. PROVIDE COORDINATION OF WORK WITH CMP AT LEAST THREE BUSINESS DAYS PRIOR TO THE DATE THAT WORK OR SERVICES OF CMP ARE REQUIRED.
9. INCORPORATE EROSION CONTROL MEASURES COMPLIANT WITH THE LATEST VERSION OF "MAINE EROSION AND SEDIMENT CONTROL HANDBOOK FOR CONSTRUCTION: BEST MANAGEMENT PRACTICES".
10. TAKE NECESSARY PRECAUTIONS TO PREVENT EQUIPMENT FLUIDS FROM LEAKING OR REACHING ANY WATER COURSE. IMMEDIATELY CONTAIN AND CLEAN FLUID DISCHARGES USING ALL MEANS NECESSARY, AS DETERMINED AND/OR APPROVED BY THE ENGINEER.
11. PROTECT, REMOVE OR RELOCATE EXISTING ITEMS, AREAS AND SURFACES. REPLACE, RESTORE AND REPAIR ITEMS, AREAS AND SURFACES, FACILITIES AND IMPROVEMENTS DISTURBED OR DAMAGED BY CONTRACTOR'S OPERATIONS TO ORIGINAL CONDITION OR MATCH IN KIND, UNLESS NOTED OTHERWISE ON DRAWINGS, AT NO ADDITIONAL COST TO OWNER. THIS APPLIES TO GRAVEL, PAVEMENT, PAVEMENT MARKINGS, CURBING, SIDEWALKS, GRASS, PLANTINGS, TREES, SIGNAGE, MAIL BOXES AND EXISTING UTILITIES. LIMIT SAW–CUT AND PAVEMENT REMOVAL TO ONLY THOSE AREAS WHERE REQUIRED OR AS SHOWN ON THE DRAWINGS.
12. MAINTAIN ACTIVE WATER DISTRIBUTION SYSTEM THROUGHOUT THE PROJECT AREA AND SERVICE TO RESIDENTS WITHIN THE PROJECT AREA AT ALL TIMES.
13. PROVIDE A MINIMUM 6.0 FEET OF COVER OVER SEWERS AND FORCE MAIN PIPING UNLESS NOTED OTHERWISE OR APPROVED BY THE ENGINEER.
14. ITEMS SHOWN IN GRAY SCALE AND LABELED N.I.C. (NOT IN CONTRACT) ARE SHOWN FOR INFORMATIONAL PURPOSES ONLY.
15. PROPERLY PROTECT AND DO NOT DISTURB PROPERTY IRONS AND MONUMENTS. IF DISTURBED, THE PROPERTY MONUMENT WILL BE RESET AT THE CONTRACTOR'S EXPENSE, BY A REGISTERED LAND SURVEYOR APPROVED BY THE ENGINEER.
16. RESTRICT ACCESS TO SITE THROUGH THE USE OF APPROPRIATE SIGNAGE, BARRIERS, FENCES, ETC. SITE SHALL BE LEFT WITH APPROPRIATE SAFETY MEASURES IN PLACE DURING NON–WORKING HOURS. SITE SAFETY IS THE RESPONSIBILITY OF CONTRACTOR, DURING BOTH WORKING AND NON–WORKING HOURS.
17. CONTRACTOR IS RESPONSIBLE FOR OBTAINING ALL NECESSARY PERMITS.
18. A COMPLETE SET OF "RECORD" DRAWINGS THAT REFLECT ANY AND ALL MODIFICATIONS TO THE SANITARY SEWER SYSTEM AND ANY OTHER UTILITY INSTALLATIONS OR ALTERATIONS WITHIN THE PROJECT LIMITS MUST BE SUBMITTED IN "RED LINE" FORMAT. THESE DRAWINGS SHALL BE SUBMITTED IN BOTH DIGITAL AND HARD COPY FORMAT AS DEFINED IN THE SPECIFICATIONS PRIOR TO PAYMENT OF FINAL RETAINAGE.
19. PROVIDE 4–INCHES OF LOAM AND SEED IN ALL LAWN AREAS DISTURBED BY CONTRACTOR'S OPERATIONS WHERE EXISTING SURFACES WAS GRASS/LAWN.

# ABBREVIATIONS

| | |
|---|---|
| AC | ASBESTOS CEMENT |
| & | AND |
| A.G. | ABOVE GROUND |
| ALUM | ALUMINUM |
| B | BORING |
| BIT. | BITUMINOUS |
| BK | BOOK |
| BM | BENCHMARK |
| CB | CATCH BASIN |
| CI | CAST IRON |
| CK | CHECKED |
| CMP | CORRUGATED METAL PIPE |
| CONC | CONCRETE |
| DI | DUCTILE IRON |
| DES | DESIGNED |
| DIA | DIAMETER |
| DR | DRAWN |
| E | EAST |
| EL | ELEVATION |
| ELEC | ELECTRICAL |
| EX | EXISTING |
| FB | FIBERGLASS |
| FF | FINISH FLOOR |
| FIN | FINISH |
| FL | FLOOR |
| FT | FOOT/FEET |
| GALV | GALVANIZED |
| GR | GORMAN RUPP |
| GRND | GROUND |
| H | HEIGHT |
| HDPE | HIGH DENSITY POLYETHYLENE PIPE |
| IN | INCH |
| INV | INVERT |
| LF | LINEAR FEET |
| LP | LIQUEFIED PETROLEUM |
| MAX | MAXIMUM |
| MDOT | MAINE DEPT. OF TRANSPORTATION |
| MH | MANHOLE |
| MIN | MINIMUM |
| MJ | MECHANICAL JOINT |
| MON | MONUMENT |
| NAD | NORTH AMERICAN DATUM |
| NAVD | NORTH AMERICAN VERT. DATUM |
| N.I.C. | NOT IN CONTRACT |
| NO | NUMBER |
| N.T.S. | NOT TO SCALE |
| O.D. | OUTSIDE DIAMETER |
| ± | PLUS OR MINUS |
| PLS | PROFESSIONAL LAND SURVEYOR |
| PSI | PER SQUARE INCH |
| PVC | POLYVINYL CHLORIDE |
| R.O.W. | RIGHT–OF–WAY |
| R/W | RIGHT–OF–WAY |
| RCP | REINFORCED CONCRETE PIPE |
| REINF. | REINFORCED |
| REQ'D | REQUIRED |
| RET | RETAINING |
| RLS | REGISTERED LAND SURVEYOR |
| RT | ROUTE |
| S | SLOPE |
| S | SEWER |
| SD | STORM DRAIN |
| SS | STAINLESS STEEL |
| SCH | SCHEDULE |
| STA. | STATION |
| TYP. | TYPICAL |
| UC | UNDERGROUND CABLE |
| W | WATER |
| W | WEST |
| W/ | WITH |
| WV | WATER VALVE |

# LEGEND:

| DESCRIPTION | EXISTING | PROPOSED |
|---|---|---|
| SANITARY SEWER MANHOLE AND OFFSET | | X FT. |
| SANITARY SEWER SERVICE CLEANOUT | CO | CO |
| STORM DRAIN MANHOLE | | |
| CATCH BASIN | | |
| TELECOMM MANHOLE | | |
| TELECOMM SERVICE BOX | T | |
| ELECTRIC MANHOLE | | |
| TRANSFORMER | | |
| UTILITY POLE W/GUY | | |
| UTILITY POLE | | |
| LIGHTPOST | | |
| WATER GATE | | |
| CURB STOP | | |
| HYDRANT | | |
| WATER WELL | W | |
| SIGN | | |
| MAILBOX | | |
| FLAGPOLE | FP | |
| CONIFEROUS TREE | | |
| DECIDUOUS TREE | | |
| SURVEY STATION | | |
| TEMPORARY BENCH MARK AND NUMBER | XX | |
| IRON PIN | | |
| MONUMENTS | MF | MS |
| SPOT ELEVATION | XXX.XX | XXX.XX |
| TEST PIT & NUMBER | TP–X | |
| BORING & NUMBER | B–X | TB |
| MONITORING WELL | MW–X | |
| CONTOUR (1' OR 2' INTERVAL) | 122 | 122 |
| CONTOUR (INDEX) | 120 | 120 |
| SANITARY SEWER | S | S |
| FORCE MAIN | FM | FM |
| STORM DRAIN | SD | SD |
| UNDERDRAIN | UD | UD |
| WATER MAIN | W | W |
| OVERHEAD UTILITY | OU OU | OU OU |
| HOUSE SERVICE / LATERAL | S | S |
| PROPERTY LINE | | |
| RIGHT OF WAY | R/W | R/W |
| EASEMENT | | |
| EDGE OF VEGETATION | | |
| FENCE | X | X |
| CENTERLINE | ℄ | ℄ |
| CURB | | |
| EDGE OF PAVEMENT | | |

## SHEET LIST INDEX


| | |
|---|---|
| GENERAL | |
| G–000 | COVER SHEET |
| G–001 | GENERAL NOTES, LEGEND AND ABBREVIATIONS |
| CIVIL | |
| CD–101 | SITE PLAN–EXISTING CONDITIONS AND DEMOLITION |
| C–101 | SITE PLAN–PROPOSED CONDITIONS |
| C–500 | CIVIL DETAILS |
| MECHANICAL | |
| MD–101 | PUMP STATION DEMOLITION PLAN |
| M–101 | PUMP STATION MECHANICAL PLAN |
| M–102 | PUMP STATION MECHANICAL SECTIONS |
| ELECTRICAL | |
| E00.01 | ELECTRICAL LEGEND |
| E80.01 | ELECTRICAL DETAILS |
| E05.01 | EXISTING ELECTRICAL SITE PLAN |
| E05.02 | PROPOSED ELECTRICAL SITE PLAN |



WOODARD & CURRAN
41 Hutchins Drive
Portland, Maine 04102
800.426.4262 | www.woodardcurran.com
COMMITMENT & INTEGRITY DRIVE RESULTS



THIS DOCUMENT IS THE PROPERTY OF WOODARD & CURRAN INC. AND ITS CLIENT. THIS DOCUMENT IS NOT TO BE REPRODUCED, CHANGED OR COPIED IN ANY FORM OR MANNER WHATSOEVER, NOR ASSIGNED TO ANY THIRD PARTY WITHOUT WRITTEN PERMISSION AND CONSENT OF WOODARD & CURRAN INC.


| REV | DESCRIPTION | DATE |
|---|---|---|
| | | |

DESIGNED BY: JJ
DRAWN BY: CB
CHECKED BY: JJ
0231265–C–001.dwg

GENERAL NOTES, LEGEND AND ABBREVIATIONS

CITY OF PORTLAND, ME

CURTIS ROAD PUMP STATION UPGRADES

JOB NO.: 0231265.00
DATE: JULY 26, 2018
SCALE: AS NOTED
SHEET: 1 OF 11

G-001

\\woodardcurran.net\shared\Projects\0231265.00 Portland – Curtis and Franklin PS Des Bid\wip\Drawings\General\0231265–G–001.dwg, Jul 26, 2018 – 4:40pm

22x34 SHEET
1:1

EXISTING SITE CONDITIONS

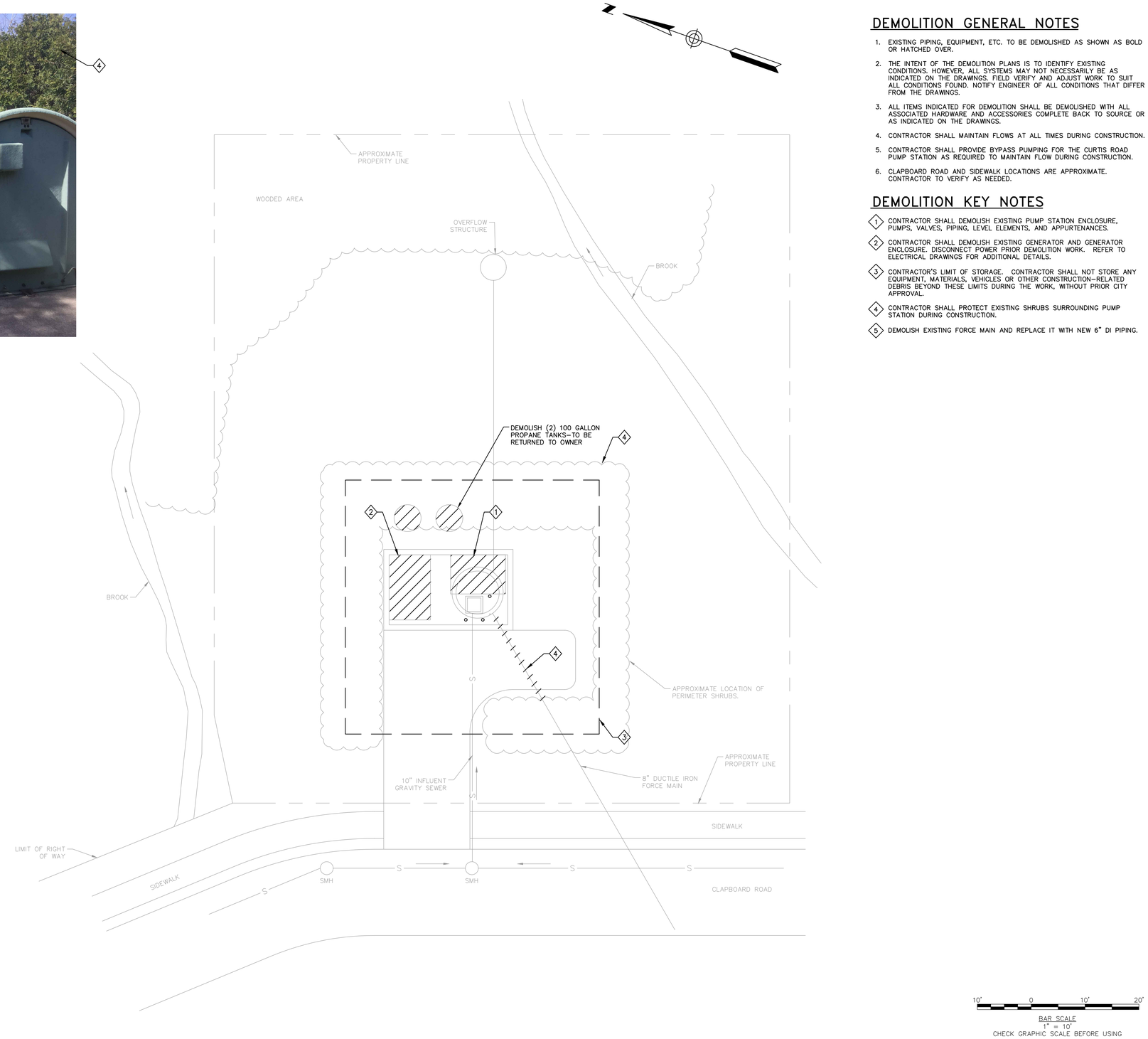


## DEMOLITION GENERAL NOTES

1. EXISTING PIPING, EQUIPMENT, ETC. TO BE DEMOLISHED AS SHOWN AS BOLD OR HATCHED OVER.
2. THE INTENT OF THE DEMOLITION PLANS IS TO IDENTIFY EXISTING CONDITIONS. HOWEVER, ALL SYSTEMS MAY NOT NECESSARILY BE AS INDICATED ON THE DRAWINGS. FIELD VERIFY AND ADJUST WORK TO SUIT ALL CONDITIONS FOUND. NOTIFY ENGINEER OF ALL CONDITIONS THAT DIFFER FROM THE DRAWINGS.
3. ALL ITEMS INDICATED FOR DEMOLITION SHALL BE DEMOLISHED WITH ALL ASSOCIATED HARDWARE AND ACCESSORIES COMPLETE BACK TO SOURCE OR AS INDICATED ON THE DRAWINGS.
4. CONTRACTOR SHALL MAINTAIN FLOWS AT ALL TIMES DURING CONSTRUCTION.
5. CONTRACTOR SHALL PROVIDE BYPASS PUMPING FOR THE CURTIS ROAD PUMP STATION AS REQUIRED TO MAINTAIN FLOW DURING CONSTRUCTION.
6. CLAPBOARD ROAD AND SIDEWALK LOCATIONS ARE APPROXIMATE. CONTRACTOR TO VERIFY AS NEEDED.

## DEMOLITION KEY NOTES

1. CONTRACTOR SHALL DEMOLISH EXISTING PUMP STATION ENCLOSURE, PUMPS, VALVES, PIPING, LEVEL ELEMENTS, AND APPURTENANCES.
2. CONTRACTOR SHALL DEMOLISH EXISTING GENERATOR AND GENERATOR ENCLOSURE. DISCONNECT POWER PRIOR DEMOLITION WORK. REFER TO ELECTRICAL DRAWINGS FOR ADDITIONAL DETAILS.
3. CONTRACTOR'S LIMIT OF STORAGE. CONTRACTOR SHALL NOT STORE ANY EQUIPMENT, MATERIALS, VEHICLES OR OTHER CONSTRUCTION–RELATED DEBRIS BEYOND THESE LIMITS DURING THE WORK, WITHOUT PRIOR CITY APPROVAL.
4. CONTRACTOR SHALL PROTECT EXISTING SHRUBS SURROUNDING PUMP STATION DURING CONSTRUCTION.
5. DEMOLISH EXISTING FORCE MAIN AND REPLACE IT WITH NEW 6" DI PIPING.

10' 0 10' 20'
BAR SCALE
1" = 10'
CHECK GRAPHIC SCALE BEFORE USING


WOODARD & CURRAN
41 Hutchins Drive
Portland, Maine 04102
800.426.4262 | www.woodardcurran.com
COMMITMENT & INTEGRITY DRIVE RESULTS



THIS DOCUMENT IS THE PROPERTY OF WOODARD & CURRAN INC. AND ITS CLIENT. REPRODUCTION OR MODIFICATION WITHOUT WRITTEN PERMISSION IS PROHIBITED.


| REV | DESCRIPTION | DATE |
|---|---|---|

DESIGNED BY: JJ
DRAWN BY: CB
CHECKED BY: JJ
0231265-CD-101.dwg

SITE PLAN-EXISTING CONDITIONS AND DEMOLITION

CITY OF PORTLAND, ME

CURTIS ROAD PUMP STATION UPGRADES

JOB NO.: 0231265.00
DATE: JULY 26, 2018
SCALE: AS NOTED
SHEET: 2 OF 11

CD-101

\\woodardcurran.net\shared\Projects\0231265.00 Portland – Curtis and Franklin PS Des Bld\wip\Drawings\Civil\0231265-CD-101.dwg, Jul 26, 2018 – 4:41pm

22x34 SHEET
1:1

## GENERAL NOTES

1. CLAPBOARD ROAD AND SIDEWALK LOCATIONS ARE APPROXIMATE. CONTRACTOR TO VERIFY AS NEEDED.

## KEY NOTES

1. CONTRACTOR SHALL PROTECT EXISTING SHRUBS SURROUNDING PUMP STATION DURING CONSTRUCTION.

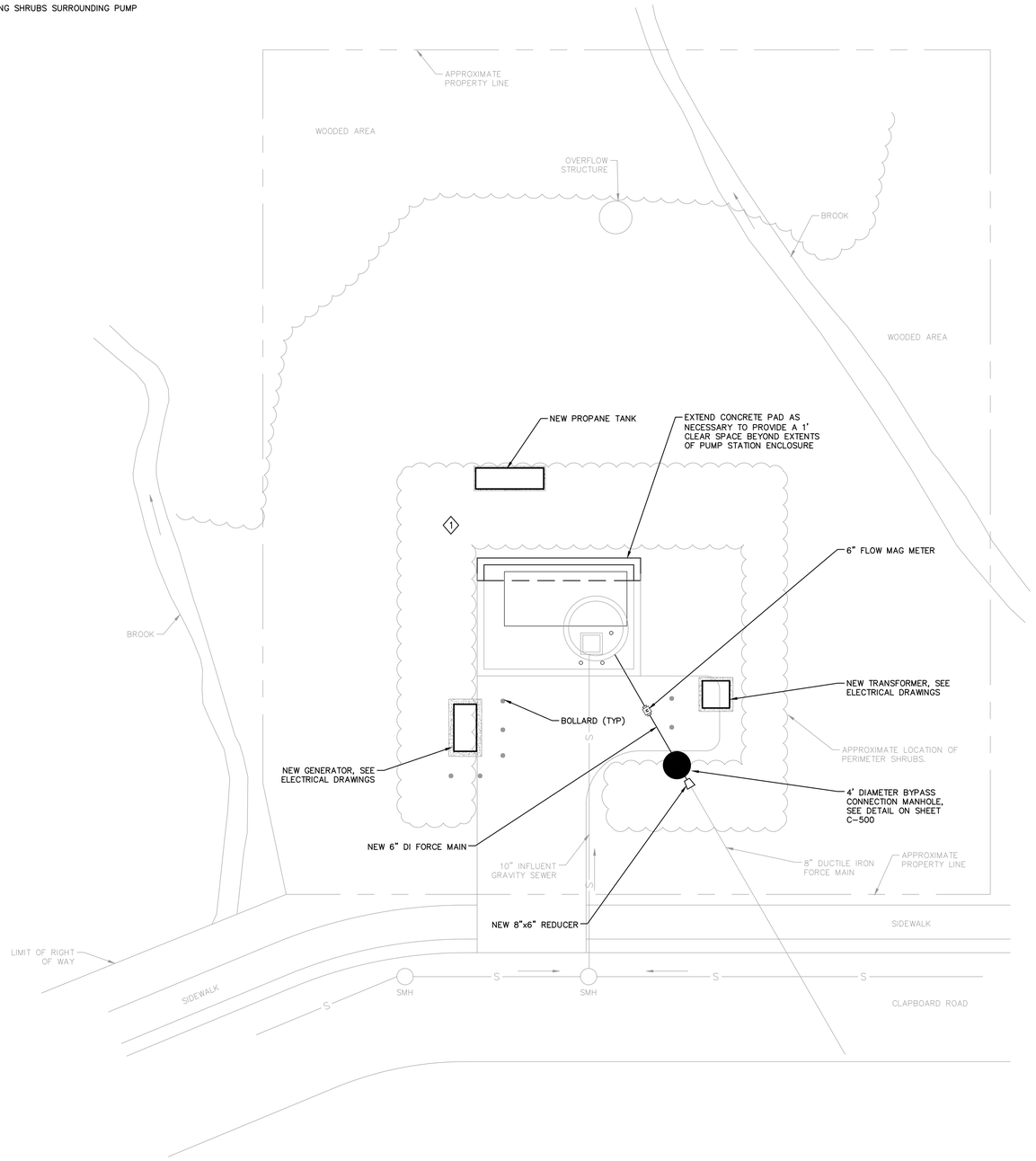


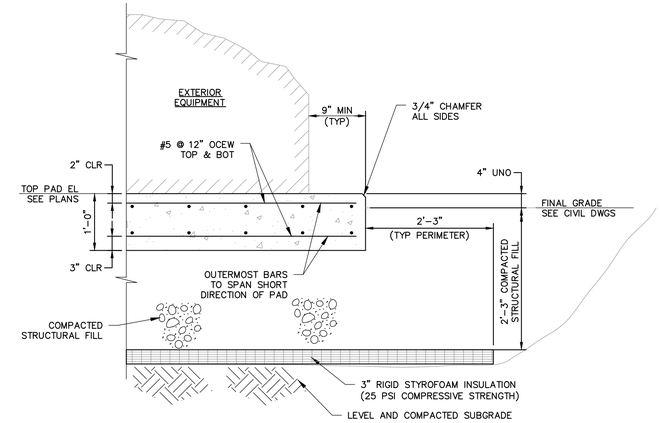


NOTES:

1. SEE MECHANICAL AND ELECTRICAL DRAWINGS FOR EQUIPMENT LOCATIONS, QUANTITIES, AND LAYOUT
2. PAD SHALL PROJECT A MINIMUM OF 9-INCH BEYOND MECHANICAL EQUIPMENT FOOTPRINT, UNLESS NOTED OTHERWISE. FOR ANCHOR RODS 5/8" DIA OR LESS, PAD PROJECTIONS MAY BE REDUCED FROM 9-INCH TO 6-INCH
3. TOP OF PAD SHALL BE LEVEL WITHIN 1/8-INCH
4. PROVIDE SACK-RUBBED FINISH TO ALL EXPOSED SIDES OF EQUIPMENT PAD AND A TROWEL FINISH TO THE TOP SURFACE
5. PROVIDE COMPACTED STRUCTURAL FILL UNDER PAD FOOTPRINT TO FROST DEPTH TO PREVENT FROST HEAVE. IF OVER-EXCAVATION IS NOT FEASIBLE, PROVIDE 2-INCH RIGID INSULATION UNDER ENTIRE PAD AND EXTENDING A MINIMUM OF 2-FT BEYOND ALL SIDES OF THE EQUIPMENT PAD. PLACE CONCRETE DIRECTLY ON TOP OF RIGID INSULATION LAYER
6. PROVIDE SAWED JOINT (SJ) IN EQUIPMENT PADS, IF SHOWN AND NOTED ON PLANS.
8. ANCHOR RODS SHALL BE 316 AISI STAINLESS STEEL, UNLESS NOTED OTHERWISE
9. PRIOR TO EQUIPMENT INSTALLATION, APPLY CURE AND SEAL COMPOUND OR WATERPROOFING TO EQUIPMENT PAD SURFACES

### EXTERIOR EQUIP PAD
NOT TO SCALE

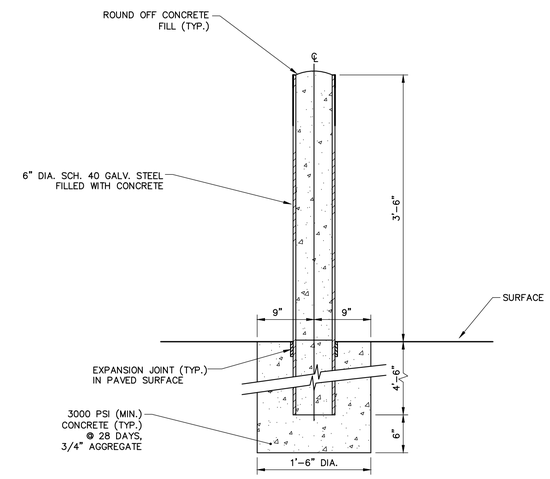


NOTES:

1. ALL BOLLARDS SHALL BE SLEEVED WITH HDPE COVERS. PROVIDE SLEEVES TO MATCH EXISTING BOLLARDS AT TOWN PUMP STATIONS.
2. COLOR SELECTED BY ENGINEER.

### BOLLARD DETAIL
NOT TO SCALE

10' 0 10' 20'
BAR SCALE
1" = 10'
CHECK GRAPHIC SCALE BEFORE USING


41 Hutchins Drive
Portland, Maine 04102
800.426.4262 | www.woodardcurran.com
WOODARD & CURRAN
COMMITMENT & INTEGRITY DRIVE RESULTS



THIS DOCUMENT IS THE PROPERTY OF WOODARD & CURRAN INC. AND ITS CLIENT. REPRODUCTION OR MODIFICATION WITHOUT WRITTEN PERMISSION IS PROHIBITED.


| REV | DESCRIPTION | DATE |
|---|---|---|
| | | |

DESIGNED BY: JJ
DRAWN BY: CB
CHECKED BY: JJ
0231265-C-101.dwg

SITE PLAN-PROPOSED CONDITIONS

CITY OF PORTLAND, ME

CURTIS ROAD PUMP STATION UPGRADES

JOB NO.: 0231265.00
DATE: JULY 26, 2018
SCALE: AS NOTED
SHEET: 3 OF 11

C-101


\\woodardcurran.net\shared\Projects\0231265.00 Portland - Curtis and Franklin PS Des Bld\wip\Drawings\Civil\0231265-C-101.dwg, Jul 26, 2018 - 4:41pm

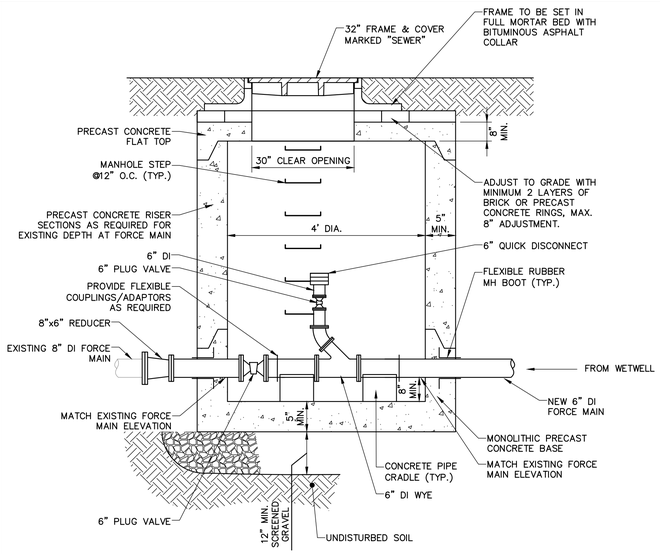


NOTES:

1. CONTRACTOR SHALL CONFIRM ELEVATION AND ALIGNMENT OF PROPOSED FORCE MAIN AND GROUND SURFACE AT BYPASS MANHOLE PRIOR TO ORDERING.

## BYPASS CONNECTION MANHOLE

N.T.S.

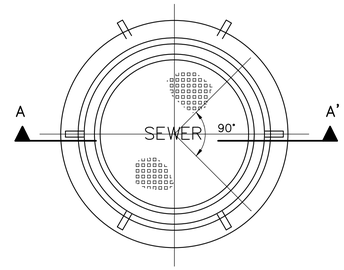


NOTES:

1. COVER TO READ "SEWER"

PLAN

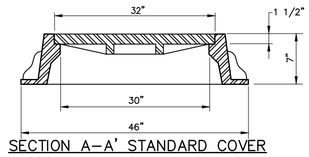


SECTION A–A' STANDARD COVER

## SEWER & DRAIN MANHOLE FRAME & COVER

N.T.S.

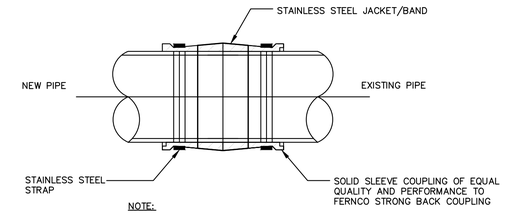


NOTE:

1. ENSURE COUPLING PROVIDED IS ECCENTRIC AND SPECIFICALLY MADE FOR THE PIPE MATERIALS BEING JOINED AS SPECIFIED.

## NEW PIPE TO EXISTING PIPE CONNECTION

N.T.S.

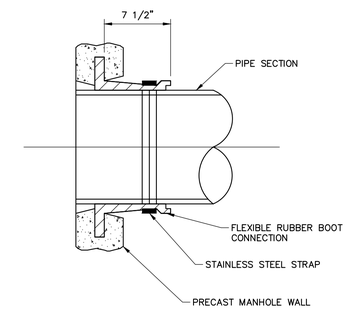


## SANITARY SEWER MANHOLE RUBBER BOOT CONNECTION

N.T.S.

WOODARD & CURRAN
41 Hutchins Drive
Portland, Maine 04102
800.426.4262 | www.woodardcurran.com
COMMITMENT & INTEGRITY DRIVE RESULTS

THIS DOCUMENT IS THE PROPERTY OF WOODARD & CURRAN INC. AND ITS CLIENT. REPRODUCTION OR MODIFICATION WITHOUT WRITTEN PERMISSION IS PROHIBITED.

| REV | DESCRIPTION | DATE |
|---|---|---|

DESIGNED BY: JJ
DRAWN BY: CB
CHECKED BY: JJ
0231265-C-500.dwg

CIVIL DETAILS

CITY OF PORTLAND, ME

CURTIS ROAD PUMP STATION UPGRADES

JOB NO.: 0231265.00
DATE: JULY 26, 2018
SCALE: AS NOTED
SHEET: 4 OF 11

C-500

22x34 SHEET
1:1

\\woodardcurran.net\shared\Projects\0231265.00 Portland – Curtis and Franklin PS Des Bld\wip\Drawings\Civil\0231265-C-500.dwg, Jul 26, 2018 – 4:42pm

22x34 SHEET
1:1

EXISTING PUMP STATION

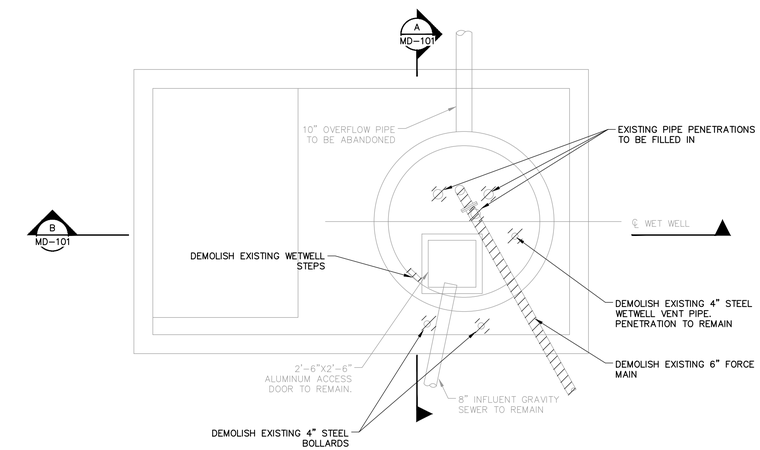


## MECHANICAL DEMOLITION GENERAL NOTES

1. EXISTING PIPING, EQUIPMENT, ETC. TO BE DEMOLISHED AS SHOWN AS BOLD OR HATCHED OVER.
2. THE INTENT OF THE DEMOLITION PLANS IS TO IDENTIFY EXISTING CONDITIONS. HOWEVER, ALL SYSTEMS MAY NOT NECESSARILY BE AS INDICATED ON THE DRAWINGS. FIELD VERIFY AND ADJUST WORK TO SUIT ALL CONDITIONS FOUND. NOTIFY ENGINEER OF ALL CONDITIONS THAT DIFFER FROM THE DRAWINGS.
3. ALL ITEMS INDICATED FOR DEMOLITION SHALL BE DEMOLISHED WITH ALL ASSOCIATED HARDWARE AND ACCESSORIES COMPLETE BACK TO SOURCE OR AS INDICATED ON THE DRAWINGS.
4. ALL FLOOR AND WALL PENETRATIONS NOT TO BE REUSED SHALL BE IN-FILLED AND BROUGHT BACK TO A FINISHED APPEARANCE.
5. REFER TO ELECTRICAL SHEETS FOR DEMOLITION OF ELECTRICAL EQUIPMENT.

## MECHANICAL DEMOLITION KEY NOTES

1. DEMOLISH ALL PUMP STATION EQUIPMENT INSIDE ENCLOSURE INCLUDING BUT NOT LIMITED TO: PUMPS, VALVES PIPING, WIRING, BASES AND SUPPORTS. EXISTING CONTROL PANEL TO BE SALVAGED AND REUSED.
2. DEMOLISH EXISTING 16'-0"x17'-8" GENERATOR ENCLOSURE, GENERATOR, AUTOMATIC TRANSFER SWITCH (ATS) AND GENERATOR CONTROLS.

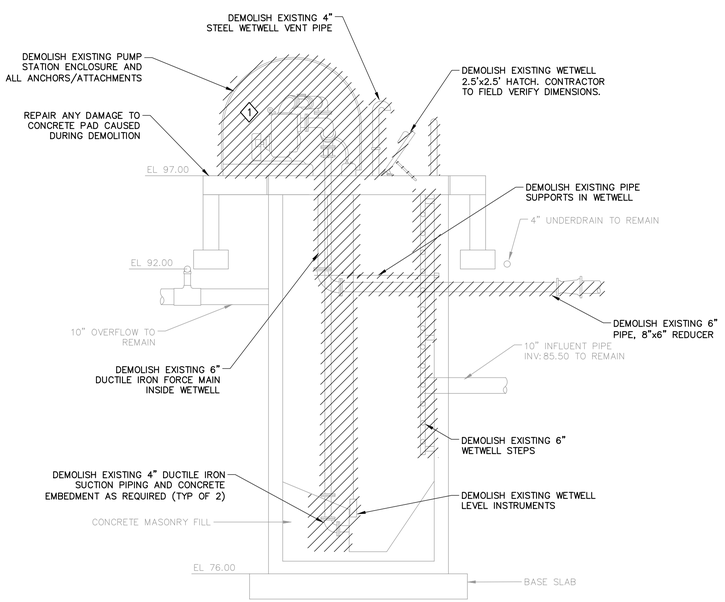


SECTION A MD-101
SCALE: 1/4"=1'-0"

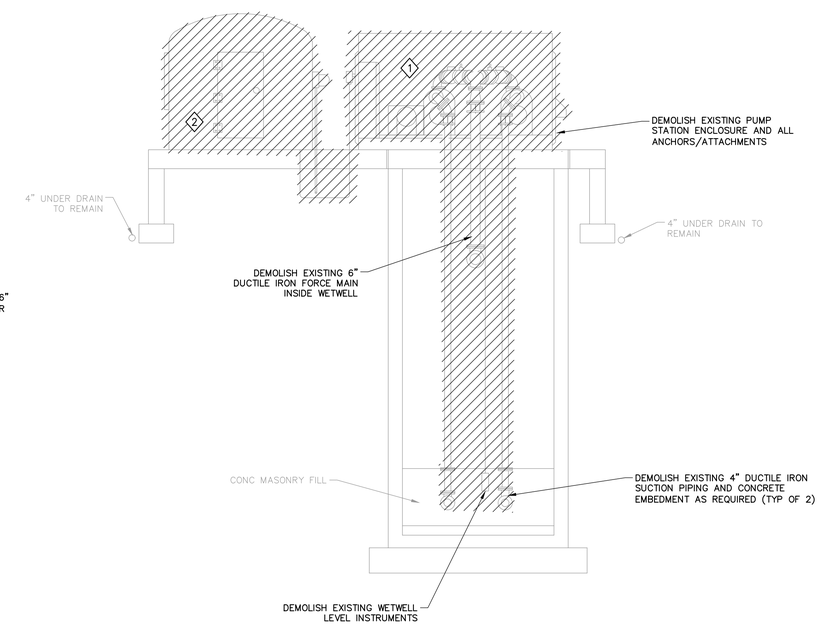


SECTION B MD-101
SCALE: 1/4"=1'-0"

6' 4' 2' 0 4' 8'
BAR SCALE
1/4" = 1'-0"
CHECK GRAPHIC SCALE BEFORE USING


41 Hutchins Drive
Portland, Maine 04102
800.426.4262 | www.woodardcurran.com
WOODARD & CURRAN
COMMITMENT & INTEGRITY DRIVE RESULTS



THIS DOCUMENT IS THE PROPERTY OF WOODARD & CURRAN INC. AND ITS CLIENT. THIS DOCUMENT OR ANY PORTION THEREOF MAY NOT BE REPRODUCED OR USED WITHOUT THE WRITTEN CONSENT OF WOODARD & CURRAN.


| REV | DESCRIPTION | DATE |
|---|---|---|

DESIGNED BY: JJ
DRAWN BY: CB
CHECKED BY: JJ
0231265-MD-101.dwg

PUMP STATION DEMOLITION PLAN

CITY OF PORTLAND, ME

CURTIS ROAD PUMP STATION UPGRADES

JOB NO.: 0231265.00
DATE: JULY 26, 2018
SCALE: AS NOTED
SHEET: 5 OF 11

MD-101


\\woodardcurran.net\shared\Projects\0231265.00 Portland - Curtis and Franklin PS Des Bld\wip\Drawings\Mechanical\0231265-MD-101.dwg, Jul 26, 2018 - 4:42pm

22x34 SHEET
1:1

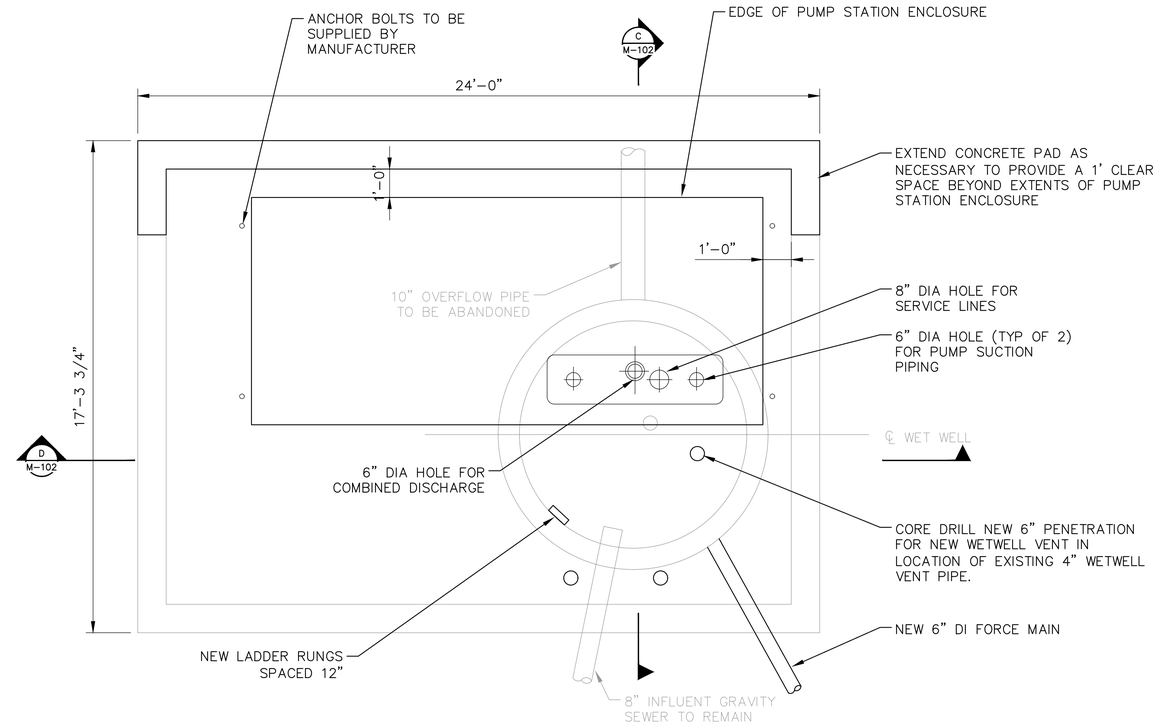


## LOWER LEVEL PLAN VIEW

SCALE 3/8" = 1'-0"

## MECHANICAL KEY NOTES

1. SKID MOUNTED PACKAGE PUMP STATION TO BE ANCHORED ON EXISTING CONCRETE PAD.

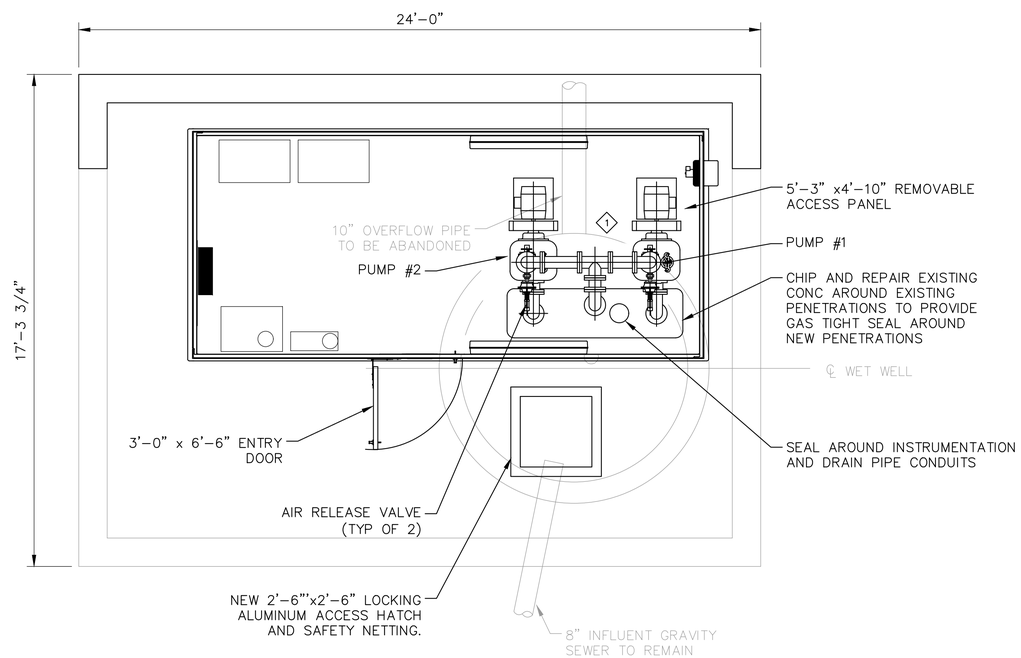


## UPPER LEVEL PLAN VIEW

SCALE 3/8" = 1'-0"

4' 3' 2' 1' 0 3' 6'

BAR SCALE
3/8" = 1'-0"
CHECK GRAPHIC SCALE BEFORE USING


41 Hutchins Drive
Portland, Maine 04102
800.426.4262 | www.woodardcurran.com
WOODARD & CURRAN
COMMITMENT & INTEGRITY DRIVE RESULTS



THIS DOCUMENT IS THE PROPERTY OF WOODARD & CURRAN INC. AND ITS CLIENT. REPRODUCTION OR MODIFICATION WITHOUT WRITTEN PERMISSION IS PROHIBITED.


| REV | DESCRIPTION | DATE |
|---|---|---|

DESIGNED BY: JJ
DRAWN BY: CB
CHECKED BY: JJ
02312265-M-101.dwg

PUMP STATION MECHANICAL PLAN

CITY OF PORTLAND, ME

CURTIS ROAD PUMP STATION UPGRADES

JOB NO.: 0231265.00
DATE: JULY 26, 2018
SCALE: AS NOTED
SHEET: 6 OF 11

M-101

\\woodardcurran.net\shared\Projects\0231265.00 Portland - Curtis and Franklin PS Des Bid\wip\Drawings\Mechanical\02312265-M-101.dwg, Jul 26, 2018 - 4:43pm

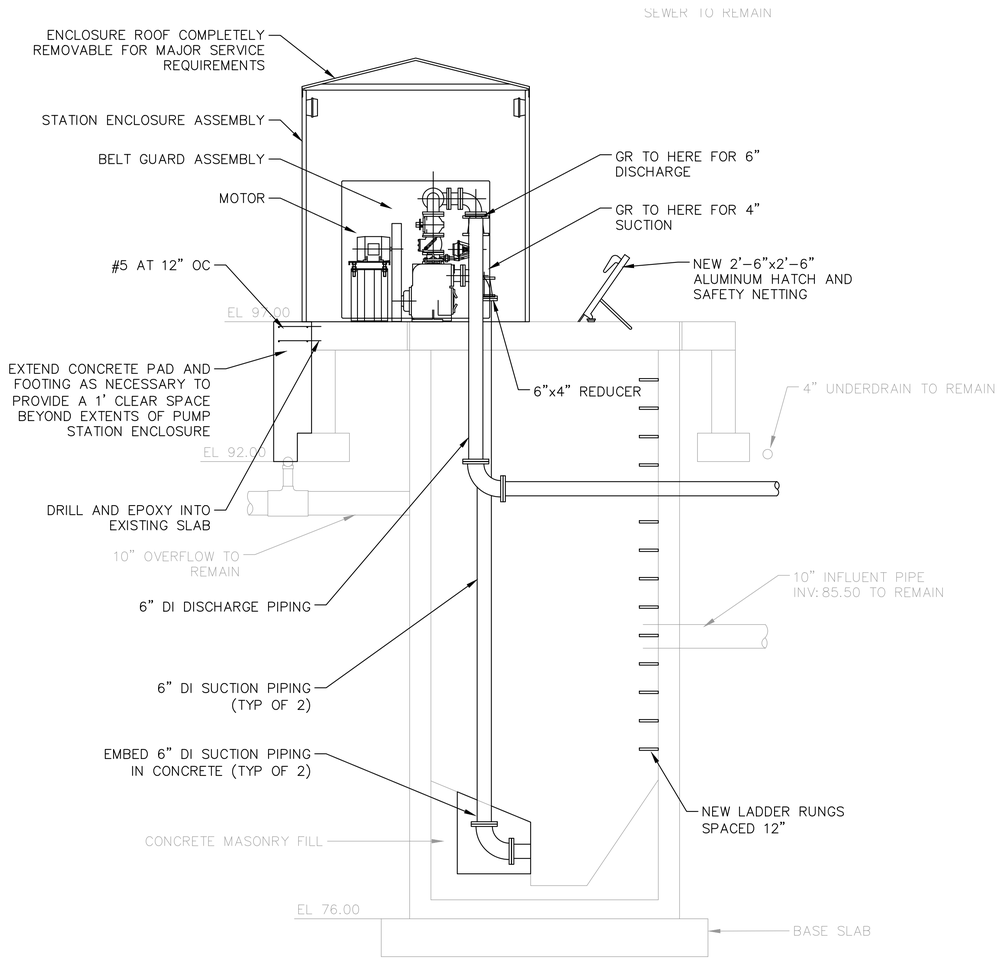


SECTION C M-101
SCALE: 3/8"=1'-0"

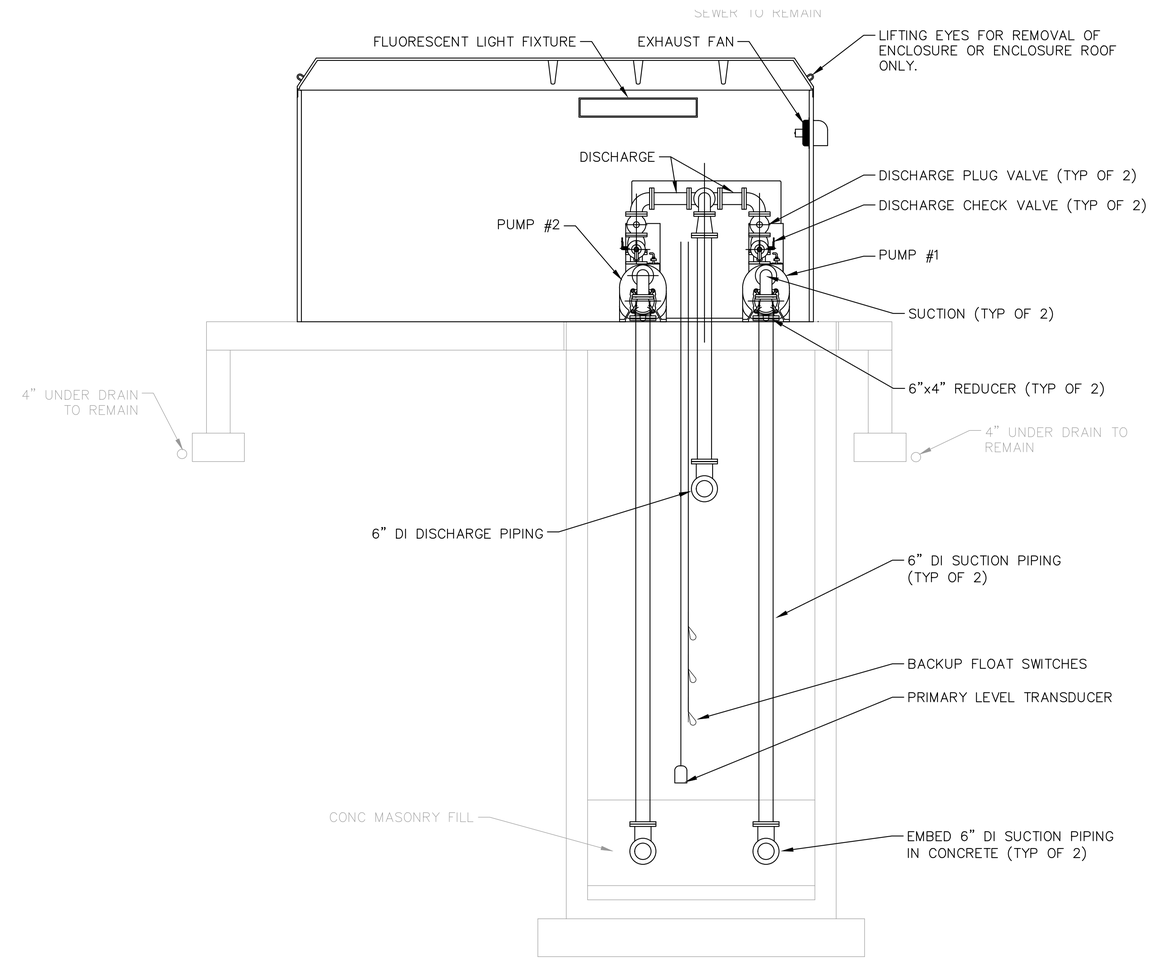


SECTION D M-101
SCALE: 3/8"=1'-0"

4' 3' 2' 1' 0 3' 6'
BAR SCALE
3/8" = 1'-0"
CHECK GRAPHIC SCALE BEFORE USING

22x34 SHEET
1:1

WOODARD & CURRAN
41 Hutchins Drive
Portland, Maine 04102
800.426.4262 | www.woodardcurran.com
COMMITMENT & INTEGRITY DRIVE RESULTS

THIS DOCUMENT IS THE PROPERTY OF WOODARD & CURRAN INC. AND ITS CLIENT. REPRODUCTION OR MODIFICATION WITHOUT WRITTEN PERMISSION IS PROHIBITED.

| REV | DESCRIPTION | DATE |
|---|---|---|

DESIGNED BY: JJ/MK
DRAWN BY: CB
CHECKED BY: JJ
0231265-M-101.dwg

PUMP STATION MECHANICAL SECTIONS

CITY OF PORTLAND, ME

CURTIS ROAD PUMP STATION UPGRADES

JOB NO.: 0231265.00
DATE: JULY 26, 2018
SCALE: AS NOTED
SHEET: 7 OF 11

M-102

\\woodardcurran.net\shared\Projects\0231265.00 Portland - Curtis and Franklin PS Des Bld\wip\Drawings\Mechanical\0231265-M-101.dwg, Jul 26, 2018 - 4:43pm

22x34 SHEET
1:1

## GENERAL

| Symbol | Description |
|---|---|
| P1–## | HOME RUN. ARROWS INDICATE NUMBER OF CIRCUITS, CROSS LINES INDICATE NUMBER OF WIRES, OTHER THAN TWO (2) PLUS BOND, WIRE SIZE NOT SHOWN INDICATES #12AWG MIN. |
| | INDICATES CIRCUIT NUMBER |
| | PANEL DESIGNATION |
| | WIRING IN RACEWAY |
| | WIRING IN RACEWAY CONCEALED UNDERGROUND OR UNDERSLAB, MINIMUM 3/4"C |
| 3/C #nn W/GND EquipNo–P | CONDUIT AND CABLE ID TAG |
| | CONDUIT TURNING UP |
| | CONDUIT TURNING DOWN |
| | CONDUIT STUB |
| | EY CONDUIT SEAL |
| | FLEXIBLE NON–METALLIC CONDUIT |
| | PANELBOARD |
| | CONTROL PANEL |
| ATC | AUTOMATIC TEMPERATURE CONTROL PANEL |
| ISBP | INTRINSIC SAFETY BARRIER PANEL |
| | POWER COMPANY METER |
| HS H/O/A | LOCAL SELECTOR SWITCH<br>H/O/A – HAND/OFF/AUTO<br>H/O/R – HAND/OFF/REMOTE<br>L/O/R – LOCAL/OFF/REMOTE |
| | PUSHBUTTON STATION, WITH "EM" EMERGENCY |
| J | JUNCTION BOX |
| MD | MOTORIZED DAMPER |
| T | THERMOSTAT |
| R | RELAY |
| B T | DOOR BELL/BUZZER AND TRANSFORMER – MTD CL UP 7'–0" AFF |
| x–# / EQUIP# | EQUIPMENT TAGS |
| X | KEYED NOTE TAG |
| X | REVISION TRIANGLE |
| } | BRACKET |

## POWER

| Symbol | Description |
|---|---|
| | NON–FUSED SAFETY SWITCH |
| F | FUSED SAFETY SWITCH |
| | NON–FUSED DISCONNECT/MAGNETIC MOTOR STARTER |
| M | MANUAL MOTOR SWITCH (MOTOR RATED SWITCH), TOGGLE OPERATED, SINGLE PHASE. 1 OR 2 POLE AS REQUIRED |
| CB 100A | ENCLOSED CIRCUIT BREAKER W/AMPERE RATING |
| M | ELECTRIC MOTOR, NUMBER INDICATES HORSEPOWER RATING, "F" INDICATES FRACTIONAL LESS THAN 1/20HP OR 100W |
| T | TRANSFORMER |
| P | POWER POLE |
| | DUPLEX RECEPTACLE, NEMA 5–20R – MTD CL UP 24" OR AS NOTED."WP" WEATHER PROOF, "G" PROTECTED BY GFCI RECEPTACLE OR BREAKER UPSTREAM, "H" MOUNTED 0'–6" BELOW CEILING, "TV" MOUNT 7'–6" UP |
| | DOUBLE DUPLEX RECEPTACLE, NEMA 5–20R – MTD CL UP 24" OR AS NOTED |
| | SINGLE RECEPTACLE, NEMA 5–20R – MTD CL UP 24" OR AS NOTED |
| | GFCI DUPLEX RECEPTACLE, NEMA 5–20R – MOUNTED CL UP 48" OR 6" ABOVE COUNTER |
| | DOUBLE DUPLEX GFCI RECEPTACLE, NEMA 5–20R – MOUNTED CL UP 48" OR 6" ABOVE COUNTER |
| | FLUSH FLOOR OUTLET, DUPLEX RECEPTACLE, NEMA 5–20R |
| | MULTI SERVICE FLUSH FLOOR BOX WITH DUPLEX RECEPTACLE AND PROVISIONS FOR DATA |
| | POWER RECEPTACLE, NEMA CONFIGURATION AS NOTED OR AS REQUIRED FOR EQUIPMENT SERVED. |
| | FLUSH CEILING MTD DEVICE BOXES, ONE W/ DUPLEX RCPT FOR PROJECTOR POWER AND ONE FOR DATA TO SERVE OH PROJECTOR. RUN ONE 1 1/2"C TO JBOX LOCATED AT FRONT OF ROOM FOR PROJECTOR CABLE PATHWAY. VERIFY FINAL LOCATION W/ OWNER PRIOR TO ROUGH IN. |
| | MULITI–OUTLET POWER STRIP, MOUNT 0'–6" ABOVE COUNTERTOP, RECEPTACLE SPACING AS NOTED. |

## MISCELLANEOUS

| Symbol | Description |
|---|---|
| B / 80.01 — SECTION # / SHEET # | SECTION CALL OUT |
| DETAIL TITLE — 1 / X–0X | DETAIL CALL OUT |

## LIGHTING

| Symbol | Description |
|---|---|
| | 2x4 LIGHT FIXTURE |
| Ab | ASSOCIATED CONTROL DEVICE<br>FIXTURE TYPE (SEE LIGHT FIXTURE SCHEDULE) |
| | 1x4 LIGHT FIXTURE |
| | 2x2 LIGHT FIXTURE |
| | FIXTURE WITH INTEGRAL EMERGENCY BATTERY PACK |
| | FIXTURE WIRED TO UNSWITCHED EMERGENCY CIRCUIT |
| | DOWN LIGHT |
| | WALL MOUNTED FIXTURES |
| ab | POLE MOUNTED SITE LIGHTING FIXTURE<br>FIXTURE TYPE (SEE LIGHT FIXTURE SCHEDULE) |
| | FLOOD LIGHT |
| | EXIT SIGN, CEILING MOUNTED. ARROW INDICATES EGRESS DIRECTION. SHADING INDICATES SIGN FACE. NUMERAL INDICATES BATTERY UNIT CONNECTED |
| | EXIT SIGN, WALL MOUNTED 7'–6" AFF OR 0'–6" ABOVE DOOR. SHADING INDICATES SIGN FACE. NUMERAL INDICATES BATTERY UNIT CONNECTED TO. |
| BATT | DUAL HEAD EMERGENCY LIGHT BATTERY PACK WITH NUMBER OF HEADS AS INDICATED – WALL MOUNTED MTD 7'–6" AFF. NUMERAL INDICATES BATTERY ID NUMBER. |
| | TANDEM EMERGENCY LIGHT BATTERY PACK & EXIT SIGN – WALL MOUNTED MTD 7'–6" AFF OR 0,–6" ABOVE DOOR. NUMERAL INDICATES BATTERY ID NUMBER. |
| | REMOTE EMERGENCY LIGHTING HEAD – WALL MOUNTED MTD 7'–6" AFF. NUMERAL INDICATES BATTERY UNIT CONNECTED TO. |
| S | SINGLE POLE TOGGLE SWITCH – MTD CL UP 4'–0" AFF |
| $S_2$ | DOUBLE POLE TOGGLE SWITCH – MTD CL UP 4'–0" AFF |
| $S_3$ | 3–WAY TOGGLE SWITCH – MTD CL UP 4'–0" AFF |
| $S_4$ | 4–WAY TOGGLE SWITCH – MTD CL UP 4'–0" AFF |
| $S_M$ | WALL MOUNTED OCCUPANCY SENSOR – MTD CL UP 4'–0" AFF |
| $S_P$ | TOGGLE SWITCH WITH PILOT LIGHT – MTD CL UP 4'–0" AFF |
| $S_D$ | DIMMER SWITCH – MTD CL UP 4'–0" AFF |
| $S_{LV}$ | LOW VOLTAGE SWITCH – MTD CL UP 4'–0" AFF |
| a | OCCUPANCY SENSOR<br>a. INDICATES CONTROLLED FIXTURE |
| PC | PHOTOCELL |
| LC | LIGHTING CONTACTOR |
| MS | MOTION SENSOR |

## FIRE ALARM DIAGRAM SYMBOLS

| Symbol | Description |
|---|---|
| FACP | FIRE ALARM CONTROL PANEL |
| FAA | FIRE ALARM ANNUNCIATOR |
| FCPS | FIELD CHARGER POWER SUPPLY |
| M | FIRE ALARM MASTER BOX |
| K | KNOX BOX |
| F | FIRE ALARM MANUAL PULL STATION – WALL MTD CL UP 4'–0" |
| H L | FIRE ALARM AUDIBLE/VISIBLE NOTIFICATION APPLIANCE CANDELA (CD) POWER PER NFPA 72 OR AS NOTED – WALL MTD BOTTOM UP 80" AFF. "H" HORN, "V" VOICE. |
| L | FIRE ALARM VISUAL NOTIFICATION APPLIANCE CANDELA (CD) POWER PER NFPA 72 OR AS NOTED – WALL MTD BOTTOM UP 80" AFF |
| | CEILING MOUNTED SMOKE DETECTOR |
| | CEILING MOUNTED HEAT DETECTOR |
| | DUCT SMOKE DETECTOR S=SUPPLY, R=RETURN |
| FS | SPRINKLER SYSTEM FLOW SWITCH |
| TS | SPRINKLER SYSTEM TAMPER SWITCH |
| PS | SPRINKLER SYSTEM PRESSURE SWITCH |
| DH | FIRE ALARM SYSTEM MAGNETIC DOOR HOLDER |
| Z | MONITOR MODULE |
| C | CONTROL MODULE |
| R | RELAY MODULE |

## COMMUNICATIONS

| Symbol | Description |
|---|---|
| TEL | TELEPHONE BACKBOARD |
| WX | PROVISIONS FOR TELEPHONE OUTLET. TWO–GANG WALL BOX WITH ONE 1"C STUB TO ABOVE ACCESSIBLE CEILING – MTD CL UP SAME AS ASSOCIATED RECEPTACLE<br>W–INDICATES WALL MOUNTED AT 60" AFF<br>P–INDICATES PAYPHONE MOUNTED AT 4'–0" AFF<br>X–INDCATES NUMBER OF JACKS, SINGLE BOX |
| | PROVISIONS FOR DATA OUTLET. TWO–GANG WALL BOX WITH ONE 1"C STUB TO ABOVE ACCESSIBLE CEILING – MTD CL UP SAME AS ASSOCIATED RECEPTACLE. SUBSCRIPTS AS NOTED ABOVE. |
| 2D2T | PROVISIONS FOR TELEPHONE & DATA OUTLET. TWO–GANG WALL BOX WITH ONE 1"C STUB TO ABOVE ACCESSIBLE CEILING – MTD CL UP SAME AS ASSOCIATED RECEPTACLE. SUBSCRIPTS AS NOTED ABOVE. |
| | PROVISIONS FOR SCADA SYSTEM OUTLET. TWO–GANG WALL BOX WITH ONE 1"C STUB TO ABOVE ACCESSIBLE CEILING – MTD CL UP SAME AS ASSOCIATED RECEPTACLE |
| | CEILING MOUNTED TELEPHONE SYSTEM OUTLET |
| | CEILING MOUNTED DATA SYSTEM OUTLET |
| | CEILING MOUNTED VOICE & DATA OUTLET |
| | FLUSH TELEPHONE FLOOR OUTLET |
| | FLUSH DATA FLOOR OUTLET |
| | FLUSH VOICE & DATA FLOOR OUTLET |
| TV | TELEVISION COAXIAL OUTLET. MOUNTED UP SAME AS ASSOCIATED RECEPTACLE |

## SECURITY

| Symbol | Description |
|---|---|
| SEC | SECURITY PANEL |
| DS | DOOR INTRUSION SWITCH |
| DE | ELECTRIC DOOR STRIKE |
| CR | CARD READER |
| KP | KEY PAD |
| | MOTION DETECTOR |
| CAM | SECURITY CAMERA<br>PTZ = PAN/TILT/ZOOM |

## INTERCOM & PAGING SYSTEM

| Symbol | Description |
|---|---|
| S | CEILING MOUNTED SPEAKER |
| PA | PAGING SYSTEM CONTROL PANEL |
| HS | PAGING SYSTEM HANDSET |

## INSTRUMENTATION

| Symbol | Description |
|---|---|
| LS / XX | FIELD MOUNTED INSTRUMENT<br>INSTRUMENT IDENTIFICATION TYPE<br>INSTRUMENT LOOP # |
| FS / XX | VENDER SUPPLIED INSTRUMENT |

INSTRUMENT IDENTIFIER:

| | |
|---|---|
| AE | ANALYSIS ELEMENT |
| AIT | ANALYSIS INDICATING TRANSMITTER |
| AT | ANALYSIS TRANSMITTER |
| DPS | DIFFERENTIAL PRESSURE SWITCH |
| FCV | FLOW CONTROL VALVE |
| FE | FLOW ELEMENT |
| FIT | FLOW INDICATING TRANSMITTER |
| FT | FLOW TRANSMITTER |
| FS | FLOW SWITCH |
| LE | LEVEL ELEMENT |
| LIT | LEVEL INDICATING TRANSMITTER |
| LT | LEVEL TRANSMITTER |
| LS | LEVEL SWITCH |
| LSH | LEVEL SWITCH HIGH |
| LSL | LEVEL SWITCH LOW |
| MOV | MOTOR OPERATED VALVE |
| PE | PRESSURE ELEMENT |
| PIT | PRESSURE INDICATING TRANSMITTER |
| PT | PRESSURE TRANSMITTER |
| PS | PRESSURE SWITCH |
| SV | SOLENOID VALVE |
| TE | TEMPERATURE ELEMENT |
| TIT | TEMPERATURE INDICATING TRANSMITTER |
| TT | TEMPERATURE TRANSMITTER |
| ZS | PROXIMITY SWITCH |

## MISC TERMINALS

| | |
|---|---|
| ARROW, SMALL | POLARITY SQUARE |
| ARROW, LARGE | SCREW TERMINAL |
| ARROW, TRIANGULAR | TERMINAL POINT, SMALL |
| CONTINUE, SMALL | TERMINAL POINT, LARGE |
| CONTINUE, LARGE | TERMINAL POINT, SQUARE |
| DOT, SMALL | SHIELD |
| DOT, MEDIUM | SHIELD W/TERMINAL POINT |
| DOT, LARGE | |

## ONE–LINE DIAGRAM SYMBOLS

| Symbol | Description |
|---|---|
| 52 GCB1 / CB 800A E.O / 52 | HV VOLTAGE DRAWOUT TYPE POWER CIRCUIT BREAKER ELECTRICALLY OPERATED<br>MV VOLTAGE DRAWOUT TYPE POWER CIRCUIT BREAKER WITH MANUAL CONTROL SWITCH |
| AT/AF EO | LOW VOLTAGE CIRCUIT BREAKER<br>AF – AMP FRAME<br>AT – AMP TRIP<br>EO – ELECTRICALLY OPERATED |
| ST | ST – SHUNT TRIP<br>GF – GROUND FAULT<br>EO – ELECTRICALLY OPERATED |
| | DISCONNECT, ISOLATION OR SAFETY SWITCH |
| | FUSED DISCONNECT SWITCH |
| 1 | MAGNETIC MOTOR STARTER. NUMERAL INDICATES NEMA SIZE FVNR UNLESS OTHERWISE NOTED.<br>FVR – FULL VOLTAGE REVERSING<br>RVAT – REDUCING VOLTAGE AUTO TRANSFORMER<br>2S – TWO SPEED<br>YD – WYE DELTA REDUCED VOLTAGE STARTER |
| | CAPACITOR |
| VFD 11 | VFD = VARIABLE FREQUENCY DRIVE<br>SS = SOLID STATE STARTER<br>DC = DC VARIABLE DRIVE<br>NUMERAL INDICATES AMP RATING |
| OA | POWER TRANSFORMER<br>OA – LIQUID TYPE SELF COOLED<br>AA – DRY TYPE SELF COOLED<br>FA – FAN COOLED<br>CONNECTION |
| 2 480/120 | POTENTIAL TRANSFORMER<br>RATIO<br>NUMBER REQUIRED |
| 2 600/5 | CURRENT TRANSFORMER<br>RATIO<br>PHASE |
| 5 | MOTOR, NUMERAL INDICATES HORSEPOWER |
| X | GENERAL LOAD, NUMERAL INDICATES LOAD IN KVA |
| | GENERATOR |
| N E L ATS | ATS – AUTOMATIC TRANSFER SWITCH<br>MTS – MANUAL TRANSFER SWITCH |
| A | METER<br>A – AMMETER<br>V – VOLTMETER<br>W – WATTMETER<br>KWH – KILOWATT HOUR<br>KVAR – KILOVAR METER<br>VAR – VAR METER<br>HZ – FREQUENCY METER<br>PF – POWER FACTOR METER |
| 3 | LINE OR LOAD REACTOR NUMERAL INDICATES % IMPENDENCE |
| DPM | DIGITAL POWER MONITOR |
| AS | METER TRANSFER SWITCH<br>AS – AMMETER SWITCH<br>VS – VOLTMETER SWITCH |
| SPD | SPD = SURGE PROTECTION DEVICE<br>ENDN = ETHERNET TO DEVICENET LINKING DEVICE<br>DPS = DEVICENET POWER SUPPLY |
| | MEDIUM VOLTAGE CABLE TERMINATION |
| | DRAWOUT DEVICE |
| LA | LIGHTNING ARRESTOR |
| K | KEY INTERLOCK |

## GROUNDING

| Symbol | Description |
|---|---|
| | BARE COPPER GROUND CABLE. (SIZE 4/0 UNLESS OTHERWISE NOTED) |
| | 3/4ø X 10'–0" LONG GROUND ROD. (10'–0" MINIMUM LENGTH) |
| | EQUIPMENT BOLTED CONNECTION OR APPROVED EQUAL. |
| | CADWELD EXOTHERMIC CONNECTION |
| | GROUND |

## CONTROL DIAGRAM SYMBOLS

NOTE: ALL CONTROL SYMBOLS ARE DRAWN ASSUMING DE–ENERGIZED CIRCUITS, EMPTY TANKS, UNPRESSURIZED LINES, ETC.

| OPEN ON INCREASE / NORMALLY CLOSED | CLOSE ON INCREASE / NORMALLY OPEN | Description |
|---|---|---|
| | | PRESSURE SWITCH |
| | | LEVEL SWITCH |
| | | FLOW SWITCH |
| | | TEMPERATURE SWITCH |
| | | PUSH BUTTON |
| | | INSTANTANEOUS CONTACT |
| | | TIMED CLOSE CONTACT |
| | | TIMED OPEN CONTACT |
| | | LIMIT SWITCH |

H O A XOO OOX — SELECTOR SWITCH: QUANTITY OF ARROWS INDICATES NUMBER OF POSITIONS. XOO INDICATES UPPER CONTACT CLOSED IN LEFT POSITION AND OPEN IN CENTER AND RIGHT POSITIONS

INTERNAL WIRING

FIELD WIRING

RELAY COIL

## ABBREVIATIONS

| | |
|---|---|
| A,AMP | AMPERES |
| AC | ALTERNATING CURRENT |
| AFF | ABOVE FINISHED FLOOR |
| AFG | ABOVE FINISHED GRADE |
| AHJ | AUTHORITY HAVING JURISDICTION |
| AIC | AMPERE INTERRUPT CAPACITY |
| AWG | AMERICAN WIRE GAUGE |
| BFG | BELOW FINISHED GRADE |
| CATV | CABLE TELEVISION |
| CB | CIRCUIT BREAKER |
| CCTV | CLOSED CIRCUIT TELEVISION |
| CL | CENTER LINE |
| CKT | CIRCUIT |
| CP | CONTROL PANEL |
| CPT | CONTROL POWER TRANSFORMER |
| CT | CURRENT TRANSFORMER |
| CU | COPPER |
| E.C. | ELECTRICAL CONTRACTOR |
| EMT | ELECTRIC METALLIC TUBING |
| FAA | FIRE ALARM ANNUNCIATOR |
| FACP | FIRE ALARM CONTROL PANEL |
| FBO | FURNISHED BY OTHERS |
| FWE | FURNISHED WITH EQUIPMENT |
| G.C. | GENERAL CONTRACTOR |
| GEN | GENERATOR |
| GFCI | GROUND FAULT CIRCUIT INTERRUPTER |
| G,GND | GROUND |
| HP | HORSEPOWER |
| HZ | FREQUENCY IN CYCLES/SECOND |
| IG | ISOLATED GROUND |
| IMT | INTERMEDIATE METALLIC CONDUIT |
| JBOX | JUNCTION BOX |
| K | KILO |
| KCMIL | 1000 CIRCULAR MILS |
| KVA | KILOVOLT AMPERE |
| KVAR | KILOVOLT AMPERE REACTIVE |
| KW | KILOWATT |
| KWH | KILOWATT HOUR |
| MCC | MOTOR CONTROL CENTER |
| MCB | MAIN CIRCUIT BREAKER |
| MFG | MANUFACTURER |
| MH | MANHOLE |
| MLO | MAIN LUGS ONLY |
| MTD | MOUNTED |
| MTR | MOTOR |
| MV | MEDIUM VOLTAGE |
| NC | NORMALLY CLOSED |
| NEC | NATIONAL ELECTRIC CODE |
| NEUT | NEUTRAL |
| NO | NORMALLY OPEN |
| OL | OVERLOAD ELEMENT |
| PF | POWER FACTOR |
| PH | PHASE |
| PRI | PRIMARY |
| PT | POTENTIAL TRANSFORMER |
| PVC | POLYVINYL CHLORIDE |
| RGS | RIGID STEEL CONDUIT |
| RTD | RESISTANCE TEMPERATURE DETECTOR |
| SEC | SECONDARY |
| SS | STAINLESS STEEL |
| SV | SOLENOID VALVE |
| TEMP | TEMPERATURE |
| TVSS | TRANSIENT VOLTAGE SURGE SUPPRESSOR |
| TYP | TYPICAL |
| UE | UNDERGROUND ELECTRIC |
| UG | UNDERGROUND |
| UPS | UNINTERRUPTED POWER SUPPLY |
| V | VOLTS |
| VA | VOLT–AMPERES |
| VAR | VOLT–AMPERE REACTIVE |
| W | WATT |
| WM | WATT METER |
| WP | WEATHER PROOF |
| XFMR | TRANSFORMER |
| XP | EXPLOSION PROOF |

WOODARD & CURRAN
41 Hutchins Drive
Portland, Maine 04102
800.426.4262 | www.woodardcurran.com
COMMITMENT & INTEGRITY DRIVE RESULTS

THIS DOCUMENT IS THE PROPERTY OF WOODARD & CURRAN INC. AND ITS CLIENT. REPRODUCTION OR MODIFICATION WITHOUT WRITTEN PERMISSION IS PROHIBITED.

| REV | DATE | DESCRIPTION |
|---|---|---|
| | | |

DESIGNED BY: SEH
DRAWN BY: SAA
CHECKED BY: AJF
E00.01.dwg

ELECTRICAL LEGEND

CITY OF PORTLAND, ME

CURTIS ROAD PUMP STATION UPGRADES

JOB NO.: 0231265.00
DATE: JULY 26, 2018
SCALE: AS NOTED
SHEET: 8 OF 11

E00.01

\\woodardcurran.net\shared\Projects\0231265.00 Portland – Curtis and Franklin PS Des Bld\wip\Drawings\Electrical\E00.01.dwg, Jul 26, 2018 – 4:43pm

22x34 SHEET
1:1

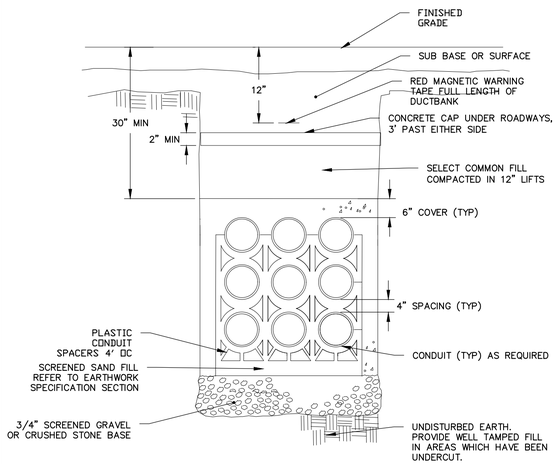


1 XX-XXX

## TYPICAL SAND ENCASED/ CONCRETE CAPPED UNDERGROUND DUCT BANK DETAIL

SCALE: N.T.S.

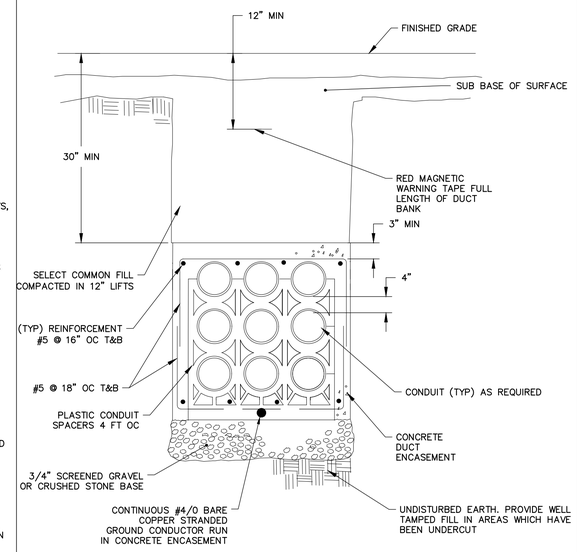


2 XX-XXX

## TYPICAL REINFORCED CONCRETE ENCASED UNDERGROUND DUCT BANK DETAIL

SCALE: N.T.S.

NOTES:

1. APPLICABLE IN ALL AREA UNLESS NOTED OTHERWISE

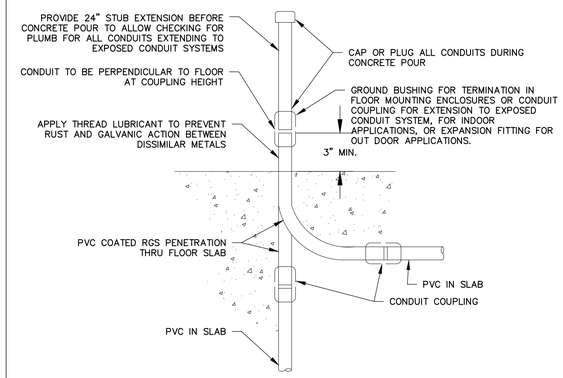


3 XX-XXX

## CONDUIT STUB-UP/UNDERGROUND PENETRATION DETAIL

SCALE: N.T.S.

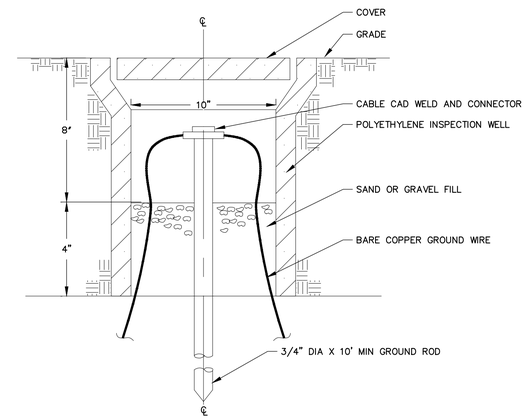


4 XX-XXX

## TYPICAL GROUND WELL DETAIL

SCALE: N.T.S.

GENERAL NOTES:

1. FINAL DIMENSIONS OF PULL BOXES SHALL BE AS VERIFIED IN THE FIELD AND SHALL BE IN ACCORDANCE WITH NEC.
2. PULLBOX COVERS SHALL BE CAST IRON. PROVIDE EXTENSION AS REQUIRED.
3. PULLBOXES SHALL BE PRECAST EQUAL TO: GEORGE ROBERTS, BROOKS, OR A.C. MILLER.
4. REFER TO SPECIFICATIONS FOR FURTHER REQUIREMENTS.

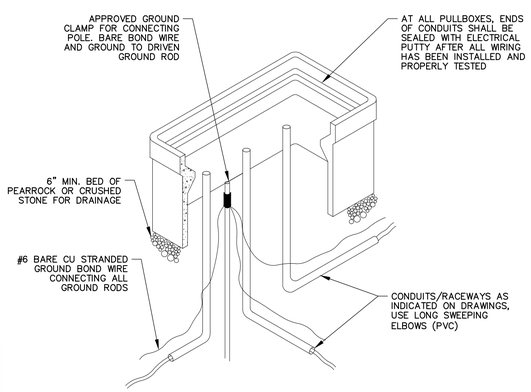


5 XX-XXX

## PULL BOX/HANDHOLE DETAIL

SCALE: N.T.S.


41 Hutchins Drive
Portland, Maine 04102
800.426.4262 | www.woodardcurran.com
WOODARD & CURRAN
COMMITMENT & INTEGRITY DRIVE RESULTS



THIS DOCUMENT IS THE PROPERTY OF WOODARD & CURRAN INC. AND ITS CLIENT. THIS DOCUMENT MAY NOT BE REPRODUCED OR TRANSMITTED WITHOUT THE WRITTEN PERMISSION OF WOODARD & CURRAN INC.


| REV | DESCRIPTION | DATE |
|---|---|---|
| | | |

DESIGNED BY: SEH
DRAWN BY: SAA
CHECKED BY: AJF
E80.01.dwg

ELECTRICAL DETAILS

CITY OF PORTLAND, ME

CURTIS ROAD PUMP STATION UPGRADES

JOB NO.: 0231265.00
DATE: JULY 26, 2018
SCALE: AS NOTED
SHEET: 9 OF 11

E80.01


\\woodardcurran.net\shared\Projects\0231265.00 Portland - Curtis and Franklin PS Des Bid\wip\Drawings\Electrical\E80.01.dwg, Jul 26, 2018 - 4:43pm

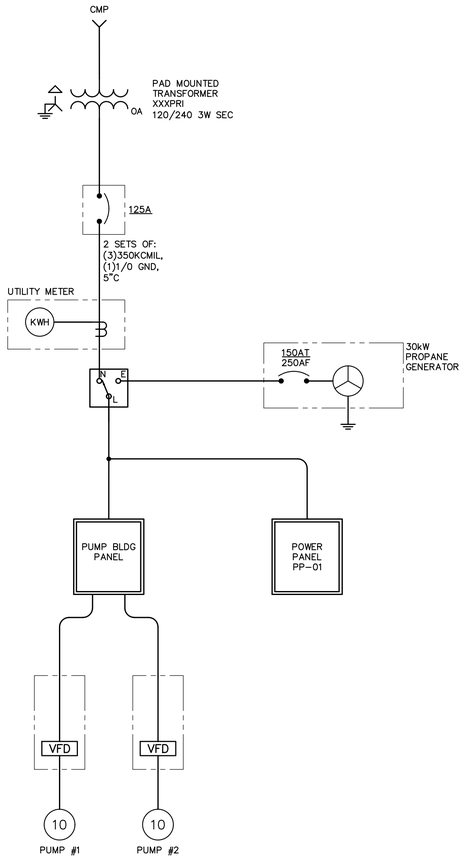


| DIRECTORY | BRKR | POLE | CKT # | KVA | KVA LOADS A | KVA LOADS B | KVA | CKT # | POLE | BRKR | DIRECTORY |
|---|---|---|---|---|---|---|---|---|---|---|---|
| PUMP 1 | 60 | 2 | 1 | 7.50 | 15.00 | | 7.50 | 2 | 2 | 60 | PUMP 2 |
| | | | 3 | | | 0.00 | | 4 | | | |
| CP | 20 | 1 | 5 | 0.50 | 0.70 | | 0.20 | 6 | 1 | 20 | LIT |
| FAN | 20 | 1 | 7 | 0.10 | | 0.10 | | 8 | | | |
| | | | 9 | | 0.00 | | | 10 | | | |
| | | | 11 | | | 0.00 | | 12 | | | |
| | | | 13 | | 0.00 | | | 14 | | | |
| | | | 15 | | | 0.00 | | 16 | | | |
| | | | | SUBTOTAL | 15.70 | 0.10 | SUBTOTAL | | | | |
| VOLTAGE: | 120/240 | | | TOTAL kVA | 15.80 | | | | PANEL NAME: | | PNL-2 |
| MAIN BREAKER: | MLO | | | TOTAL AMPS | 66 | | | | LOCATION: | | |
| BUSES: | 100 | | | | | | | | MOUNTING: | | SURFACE |
| PH & WIRES: | 1PH 3W | | | | | | | | AIC RATING: | | 10 kAIC |
| NOTES: | | | | | | | | | | | |

| DIRECTORY | BRKR | POLE | CKT # | KVA | KVA LOADS A | KVA LOADS B | KVA | CKT # | POLE | BRKR | DIRECTORY |
|---|---|---|---|---|---|---|---|---|---|---|---|
| GEN BLOCK HEATER | 15 | 2 | 1 | 2.50 | 2.50 | | | 2 | 2 | 60 | MAIN |
| | | | 3 | 2.50 | | 2.50 | | 4 | | | |
| SPACE HEATER | 15 | 2 | 5 | 2.50 | 2.60 | | 0.10 | 6 | 1 | 15 | RECEPTACLE |
| | | | 7 | 2.50 | | 2.70 | 0.20 | 8 | 1 | 15 | LIGHTS |
| HEATER, WALL (UNDER BKR PNL) | 15 | 2 | 9 | 2.50 | 2.50 | | | 10 | | | |
| | | | 11 | 2.50 | | 2.50 | | 12 | | | |
| | | | 13 | | 0.00 | | | 14 | | | |
| | | | 15 | | | 0.00 | | 16 | | | |
| | | | | SUBTOTAL | 7.60 | 7.70 | SUBTOTAL | | | | |
| VOLTAGE: | 120/240 | | | TOTAL kVA | 15.30 | | | | PANEL NAME: | | PNL-1 |
| MAIN BREAKER: | 60 | | | TOTAL AMPS | 64 | | | | LOCATION: | | |
| BUSES: | 100 | | | | | | | | MOUNTING: | | SURFACE |
| PH & WIRES: | 1PH 3W | | | | | | | | AIC RATING: | | 10 kAIC |
| NOTES: | | | | | | | | | | | |

GENERAL DEMOLITION NOTES:

1. THE INTENT OF THE DEMOLITION PLANS IS TO DOCUMENT EXISTING CONDITIONS. HOWEVER, ALL ELECTRICAL EQUIPMENT MAY NOT NECESSARILY BE INDICATED ON THE DRAWINGS. FIELD VERIFY AND ADJUST WORK TO SUIT ALL CONDITIONS FOUND.
2. ALL ITEMS SHOWN WITH LIGHT DESIGNATION INDICATES EXISTING EQUIPMENT TO REMAIN. ALL ITEMS SHOWN WITH BOLD DESIGNATION INDICATES EQUIPMENT TO BE DEMOLISHED AND/OR NEW WORK OR EQUIPMENT. ALL ITEMS INDICATED FOR REMOVAL SHALL BE REMOVED WITH ALL ASSOCIATED HARDWARE AND ACCESSORIES COMPLETE BACK TO SOURCE INCLUDING, BUT NOT LIMITED TO: CONDUIT, BOXES, WIRING, CABLES, HANGERS, ETC.

KEYED DEMOLITION NOTES:

1. CONTRACTOR SHALL DEMOLISH EXISTING PUMP ENCLOSURE, PUMPS, VALVES, LEVEL ELEMENTS, AND APPURTENANCES.
2. CONTRACTOR SHALL DEMOLISH EXISTING GENERATOR AND GENERATOR ENCLOSURE. DISCONNECT POWER PRIOR DEMOLITION WORK. REFER TO ELECTRICAL DRAWINGS FOR ADDITIONAL DETAILS.
3. CMP TRANSFORMER #4 IS APPROXIMATELY 175'-0" AWAY FROM EXISTING CMP TRANSFORMER #4. LOCATION IS DIAGRAMMATIC, TO BE CONFIRMED.
4. EXISTING SCADA CONTROL PANEL TO REMAIN FOR RE-USE.

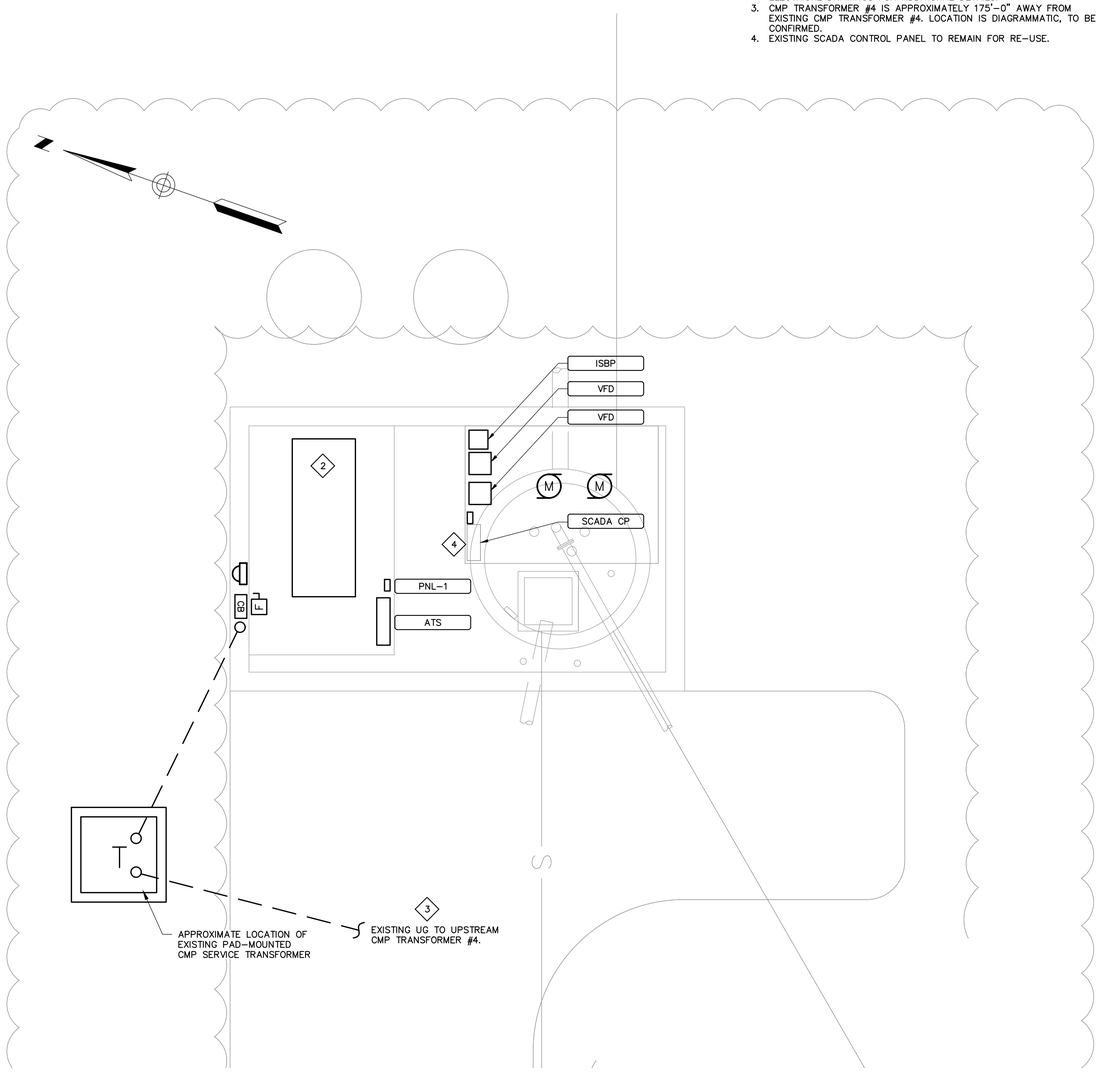


EXISTING SITE CONDITIONS

SCALE: 1" = 4'

WOODARD & CURRAN
41 Hutchins Drive
Portland, Maine 04102
800.426.4262 | www.woodardcurran.com
COMMITMENT & INTEGRITY DRIVE RESULTS

THIS DOCUMENT IS THE PROPERTY OF WOODARD & CURRAN INC. AND ITS CLIENT. THIS DOCUMENT MAY NOT BE REPRODUCED OR TRANSMITTED IN ANY FORM WITHOUT WRITTEN PERMISSION.

| REV | DESCRIPTION | DATE |
|---|---|---|
| | | |

DESIGNED BY: SEH
DRAWN BY: SAA
CHECKED BY: AJF
E05.01.dwg

EXISTING ELECTRICAL SITE PLAN

CITY OF PORTLAND, ME

CURTIS ROAD PUMP STATION UPGRADES

JOB NO.: 0231265.00
DATE: JULY 26, 2018
SCALE: AS NOTED
SHEET: 10 OF 11

E05.01

22x34 SHEET
1:1

\\woodardcurran.net\shared\Projects\0231265.00 Portland - Curtis and Franklin PS Des Bid\wip\Drawings\Electrical\E05.01.dwg, Jul 26, 2018 - 4:44pm

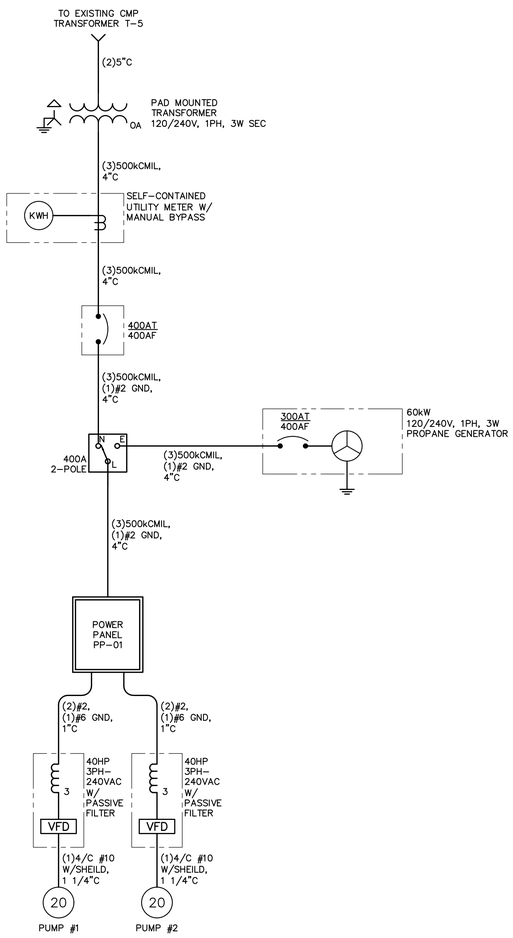


ELECTRICAL ONE-LINE DIAGRAM

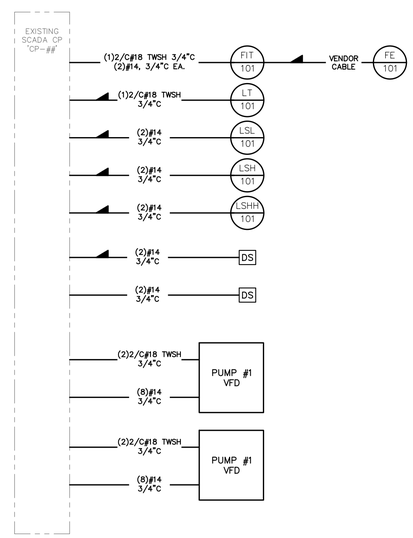


INSTRUMENTATION AND CONTROLS RISER DIAGRAM

| DIRECTORY | BRKR | POLE | CKT # | KVA | KVA LOADS A | KVA LOADS B | KVA | CKT # | POLE | BRKR | DIRECTORY |
|---|---|---|---|---|---|---|---|---|---|---|---|
| PUMP 1 | 60 | 2 | 1 | 10.80 | 21.60 | | 10.80 | 2 | 2 | 60 | PUMP 2 |
| | | | 3 | 10.80 | | 21.60 | 10.80 | 4 | | | |
| GEN BLOCK HEATER | 20 | 2 | 5 | 2.50 | 6.25 | | 3.75 | 6 | 2 | 40 | SPACE HEATER |
| | | | 7 | 2.50 | | 6.25 | 3.75 | 8 | | | |
| SPARE | 20 | 2 | 9 | 0.00 | 0.50 | | 0.50 | 10 | 1 | 20 | CP |
| | | | 11 | 0.00 | | 0.20 | 0.20 | 12 | 1 | 20 | LIT |
| FAN | 20 | 1 | 13 | 0.10 | 0.20 | | 0.10 | 14 | 1 | 20 | RECEPTACLE |
| LIGHTS | 20 | 1 | 15 | 0.20 | | 0.20 | | 16 | | 20 | SPARE |
| SPARE | 20 | | 17 | | 0.00 | | | 18 | | 20 | SPARE |
| SPARE | 20 | | 19 | | | 0.00 | | 20 | | | SPACE |
| SPACE | | | 21 | | 0.00 | | | 22 | | | SPACE |
| SPACE | | | 23 | | | 0.00 | | 24 | | | SPACE |
| | | | | SUBTOTAL | 28.55 | 28.25 | SUBTOTAL | | | | |

| | | | | | |
|---|---|---|---|---|---|
| VOLTAGE: | 120/240 | TOTAL KVA | 56.80 | PANEL NAME: | CURTIS NEW POWER PANEL |
| MAIN BREAKER: | 300 | TOTAL AMPS | 237 | LOCATION: | PUMP STATION INTERIOR |
| BUSES: | 400 | | | MOUNTING: | SURFACE |
| PH & WIRES: | 1PH 3W | | | AIC RATING: | 42 |
| NOTES: | | | | | |

PANEL SCHEDULE

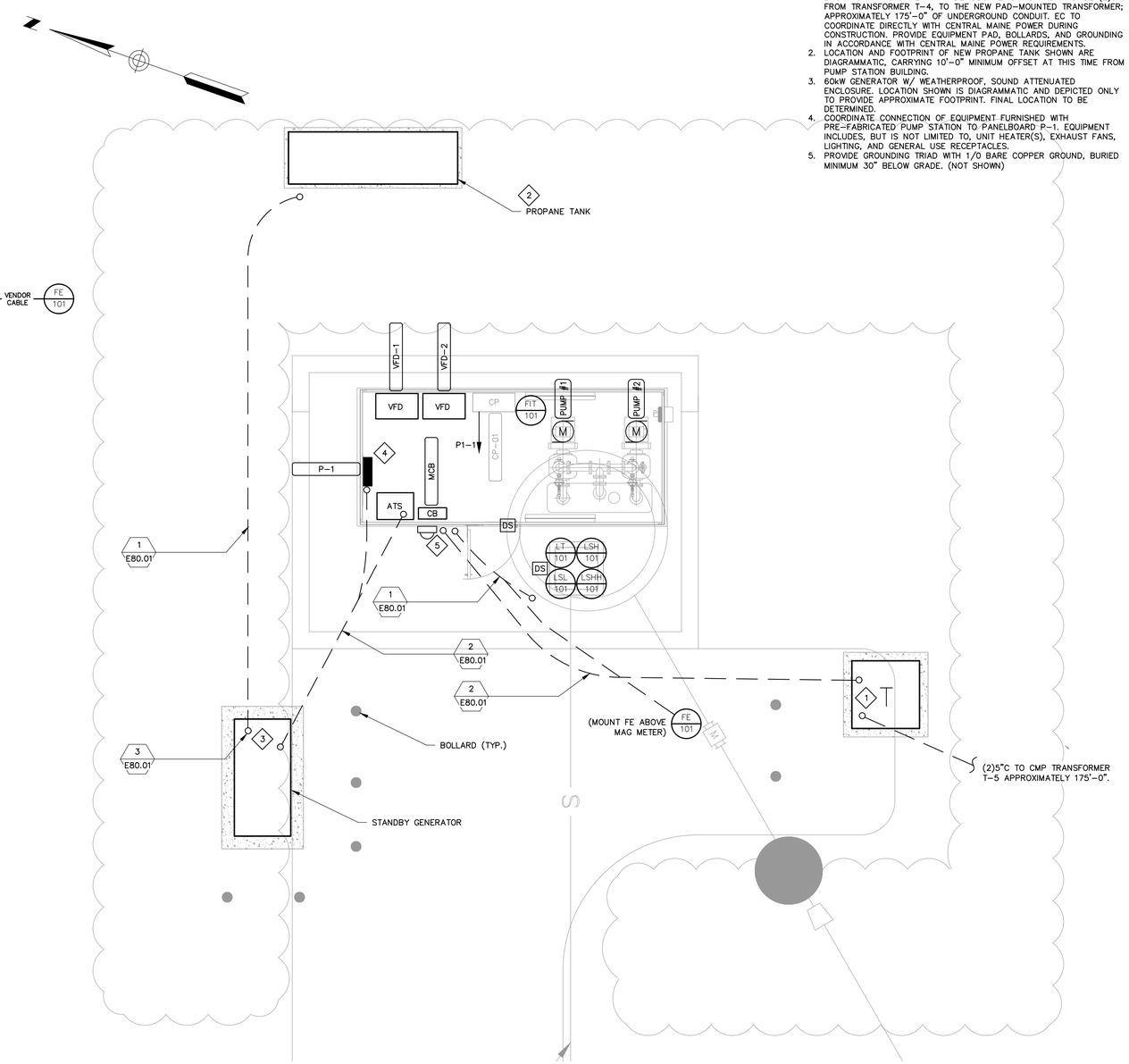


ELECTRICAL PLAN
SCALE: 1"=4'

GENERAL NOTES:

1. ALL ITEMS SHOWN WITH LIGHT DESIGNATION INDICATES EXISTING EXISTING. ALL ITEMS SHOWN WITH BOLD DESIGNATION INDICATES NEW WORK, UNLESS SPECIFICALLY INDICATED OTHERWISE.
2. ALL EQUIPMENT AND LOCATIONS ARE SHOWN DIAGRAMMATICALLY AND SHALL BE COORDINATED IN THE FIELD PRIOR TO INSTALLATION.

KEYED NOTES:

1. NEW PAD-MOUNTED TRANSFORMER LOCATION SHOWN IS DIAGRAMMATIC. FINAL LOCATION TO BE COORDINATED WITH CENTRAL MAINE POWER COMPANY. FIELD COORDINATE EXISTING PRIMARY DUCT BANK ROUTING BACK TO TRANSFORMER T-4. DEMOLISH EXISTING AND PROVIDE (2)5"C FROM TRANSFORMER T-4, TO THE NEW PAD-MOUNTED TRANSFORMER; APPROXIMATELY 175'-0" OF UNDERGROUND CONDUIT. EC TO COORDINATE DIRECTLY WITH CENTRAL MAINE POWER DURING CONSTRUCTION. PROVIDE EQUIPMENT PAD, BOLLARDS, AND GROUNDING IN ACCORDANCE WITH CENTRAL MAINE POWER REQUIREMENTS.
2. LOCATION AND FOOTPRINT OF NEW PROPANE TANK SHOWN ARE DIAGRAMMATIC, CARRYING 10'-0" MINIMUM OFFSET AT THIS TIME FROM PUMP STATION BUILDING.
3. 60kW GENERATOR W/ WEATHERPROOF, SOUND ATTENUATED ENCLOSURE. LOCATION SHOWN IS DIAGRAMMATIC AND DEPICTED ONLY TO PROVIDE APPROXIMATE FOOTPRINT. FINAL LOCATION TO BE DETERMINED.
4. COORDINATE CONNECTION OF EQUIPMENT FURNISHED WITH PRE-FABRICATED PUMP STATION TO PANELBOARD P-1. EQUIPMENT INCLUDES, BUT IS NOT LIMITED TO, UNIT HEATER(S), EXHAUST FANS, LIGHTING, AND GENERAL USE RECEPTACLES.
5. PROVIDE GROUNDING TRIAD WITH 1/0 BARE COPPER GROUND, BURIED MINIMUM 30" BELOW GRADE. (NOT SHOWN)

4' 0 4' 8'
BAR SCALE
1" = 4'
CHECK GRAPHIC SCALE BEFORE USING


WOODARD & CURRAN
41 Hutchins Drive
Portland, Maine 04102
800.426.4262 | www.woodardcurran.com
COMMITMENT & INTEGRITY DRIVE RESULTS


THIS DOCUMENT IS THE PROPERTY OF WOODARD & CURRAN INC. AND ITS CLIENT. THIS DOCUMENT CAN NOT BE REPRODUCED OR TRANSMITTED WITHOUT WRITTEN PERMISSION.


| REV | DESCRIPTION | DATE |
|---|---|---|

DESIGNED BY: SEH
DRAWN BY: SAA
CHECKED BY: AJF
(705.02.dwg)

PROPOSED ELECTRICAL SITE PLAN

CITY OF PORTLAND, ME

CURTIS ROAD PUMP STATION UPGRADES

JOB NO.: 0231265.00
DATE: JULY 26, 2018
SCALE: AS NOTED
SHEET: 11 OF 11

E05.02

22x34 SHEET
1:1

\\woodardcurran.net\shared\Projects\0231265.00 Portland - Curtis and Franklin PS Des Bid\wip\Drawings\Electrical\E05.02.dwg, Jul 26, 2018 - 4:45pm

# City of Portland, Maine
# Curtis Road Pump Station Design-Build Project Schedule

| ID | Task Name | Duration | Start | Finish |
|---|---|---|---|---|
| 0 | **Curtis Road PS Design-Build Project Schedule** | **223 days** | **Fri 7/27/18** | **Fri 6/14/19** |
| 1 | **Phase 1 - Curtis Road PS 60% Design and GMP** | **22 days** | **Fri 7/27/18** | **Mon 8/27/18** |
| 2 | Submit Curtis Road PS GMP to City | 1 day | Fri 7/27/18 | Fri 7/27/18 |
| 3 | City Review of Curtis Road PS GMP | 21 days | Mon 7/30/18 | Mon 8/27/18 |
| 4 | GMP Construction Proposal Acceptance | 0 days | Mon 8/27/18 | Mon 8/27/18 |
| 5 | Phase 2 Notice to Proceed | 0 days | Mon 8/27/18 | Mon 8/27/18 |
| 6 | **Phase 2 - Curtis Road PS Final Design and Procurement** | **147 days** | **Tue 8/28/18** | **Fri 3/29/19** |
| 7 | **Curtis Road Pump Station - Pre-Construction** | **147 days** | **Tue 8/28/18** | **Fri 3/29/19** |
| 8 | 90% Design Development | 13 days | Tue 8/28/18 | Fri 9/14/18 |
| 9 | 90% Design Development Submittal | 0 days | Fri 9/14/18 | Fri 9/14/18 |
| 10 | 90% Design Development Workshop | 1 day | Mon 9/17/18 | Mon 9/17/18 |
| 11 | Procure Gorman-Rupp Pump and Generator Packages | 109 days | Mon 9/17/18 | Fri 2/22/19 |
| 12 | Complete 100% IFC Design Documents | 9 days | Tue 9/18/18 | Fri 9/28/18 |
| 13 | Submit 100% Documents to MEDEP | 38 days | Mon 10/1/18 | Wed 11/21/18 |
| 14 | Apply for Building & Electrical Permits | 19 days | Mon 11/26/18 | Thu 12/20/18 |
| 15 | Procure All Remaining Equipment & Materials | 67 days | Fri 12/21/18 | Fri 3/29/19 |
| 16 | Subcontractor Pre-Qualification | 29 days | Tue 8/28/18 | Mon 10/8/18 |
| 17 | Subcontractors Bidding & Awards (2 packages) | 20 days | Tue 10/9/18 | Mon 11/5/18 |
| 18 | **Curtis Road Pump Station - Construction** | **54 days** | **Mon 4/1/19** | **Fri 6/14/19** |
| 19 | Mobilize | 5 days | Mon 4/1/19 | Fri 4/5/19 |
| 20 | Construct Frost Wall & Pad Extension | 10 days | Mon 4/8/19 | Fri 4/19/19 |
| 21 | Implement By-Pass Pumping (including manhole) | 12 days | Mon 4/8/19 | Tue 4/23/19 |
| 22 | Install Pumps, Enclosure and Generator | 20 days | Mon 4/22/19 | Fri 5/17/19 |
| 23 | Site Restoration | 9 days | Mon 5/20/19 | Fri 5/31/19 |
| 24 | Commissioning, Training & Start-up | 2 days | Mon 5/20/19 | Tue 5/21/19 |
| 25 | O&M Manuals | 9 days | Mon 5/20/19 | Fri 5/31/19 |
| 26 | Record Drawings | 9 days | Mon 5/20/19 | Fri 5/31/19 |
| 27 | Substantial Completion | 0 days | Fri 5/31/19 | Fri 5/31/19 |
| 28 | Punchlist | 10 days | Mon 6/3/19 | Fri 6/14/19 |
| 29 | Final Completion | 0 days | Fri 6/14/19 | Fri 6/14/19 |

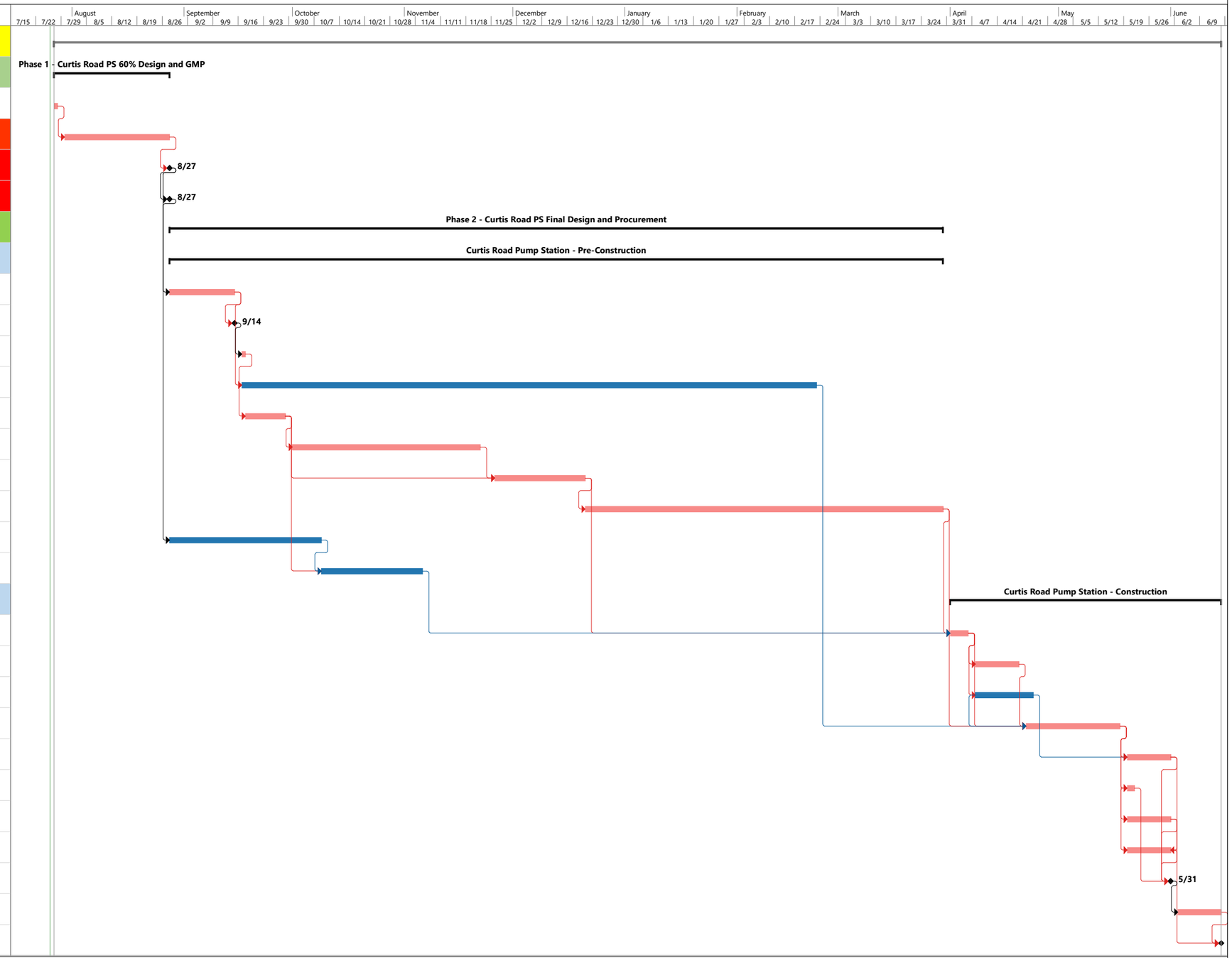


Curtis Road PS Design-Build
Schedule Date: Thu 7/26/18

Task | Split | Milestone | Summary | Project Summary | Inactive Task | Inactive Milestone | Inactive Summary | Manual Task | Duration-only | Manual Summary Rollup | Manual Summary | Start-only | Finish-only | External Tasks | External Milestone | Deadline | Critical | Critical Split | Baseline | Baseline Milestone | Baseline Summary | Progress | Manual Progress | Slippage